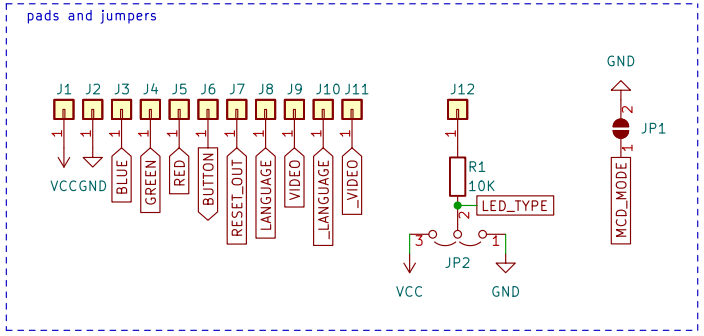

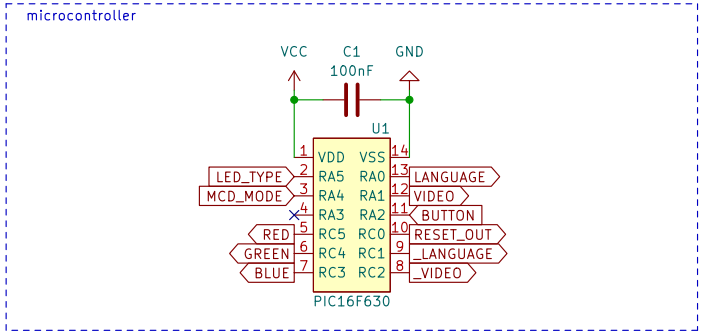

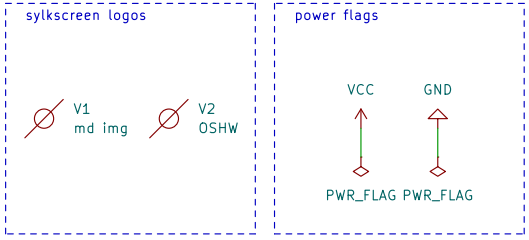

Another switchless mod for MD with a PIC microcontroller

screwbreaker

Sheet: /

File: MD_Mod.kicad_sch

Title: PIC MD Mod

Size: A4	Date: 2022-05-04	**Rev: 1.0**
KiCad E.D.A. kicad 6.0.6-3a73a75311~116~ubuntu20.04.1		Id: 1/1