Change I2C addr

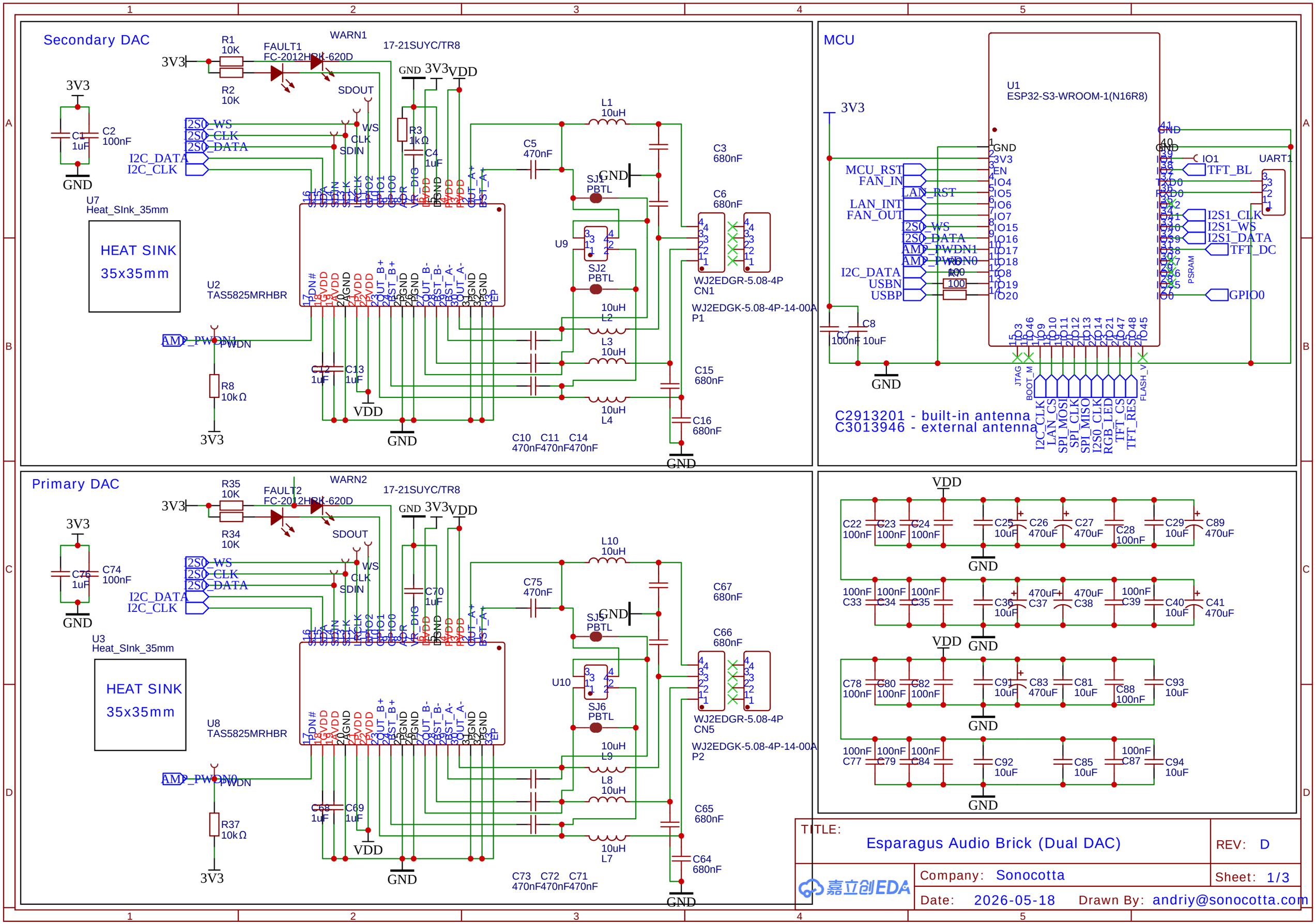

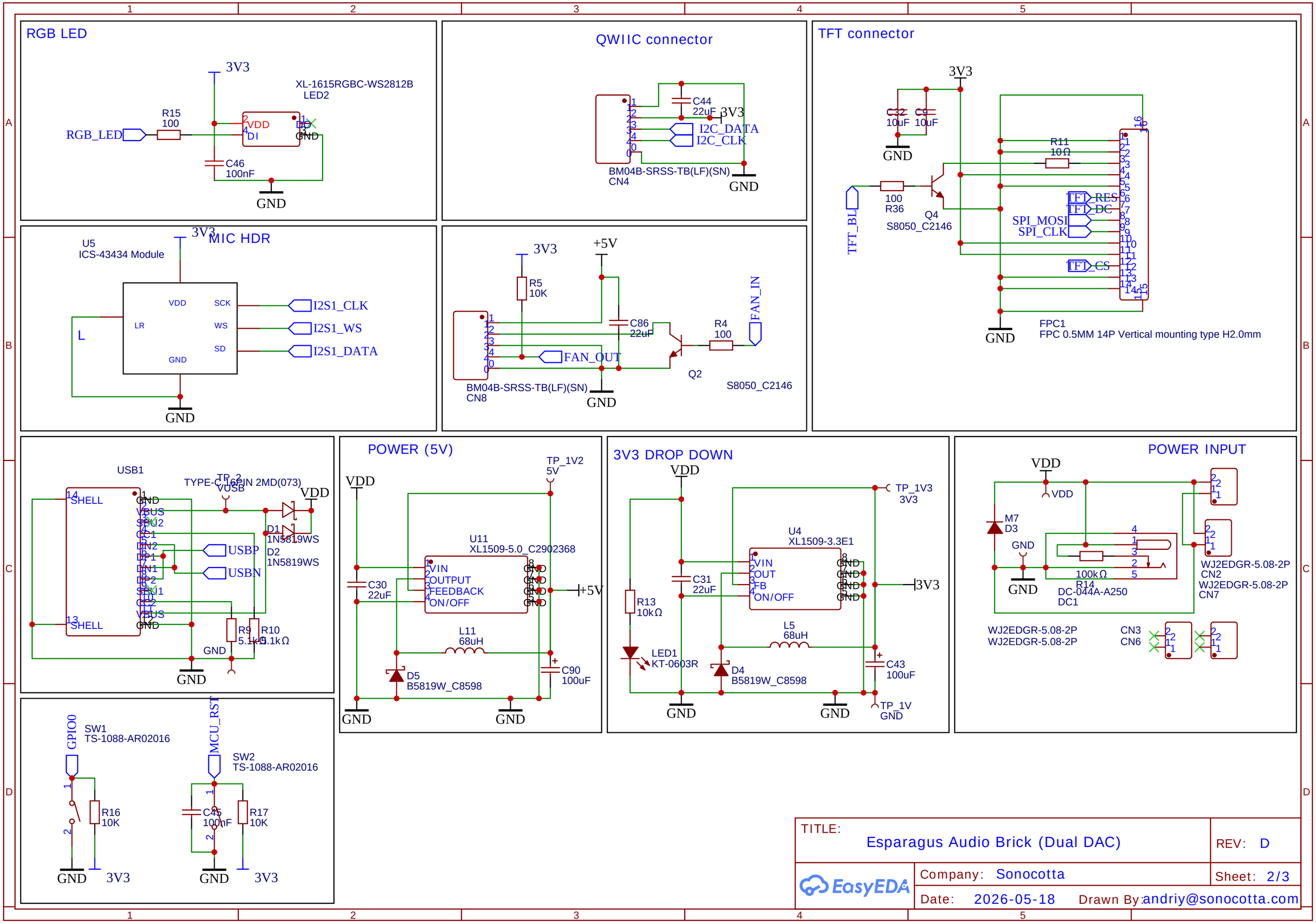

TITLE: Esparagus Audio Brick (Dual DAC)	REV: D
EasyEDA	Company: Sonocotta
Date: 2026-05-18	Drawn By: andriy@sonocotta.com
	Sheet: 2/3

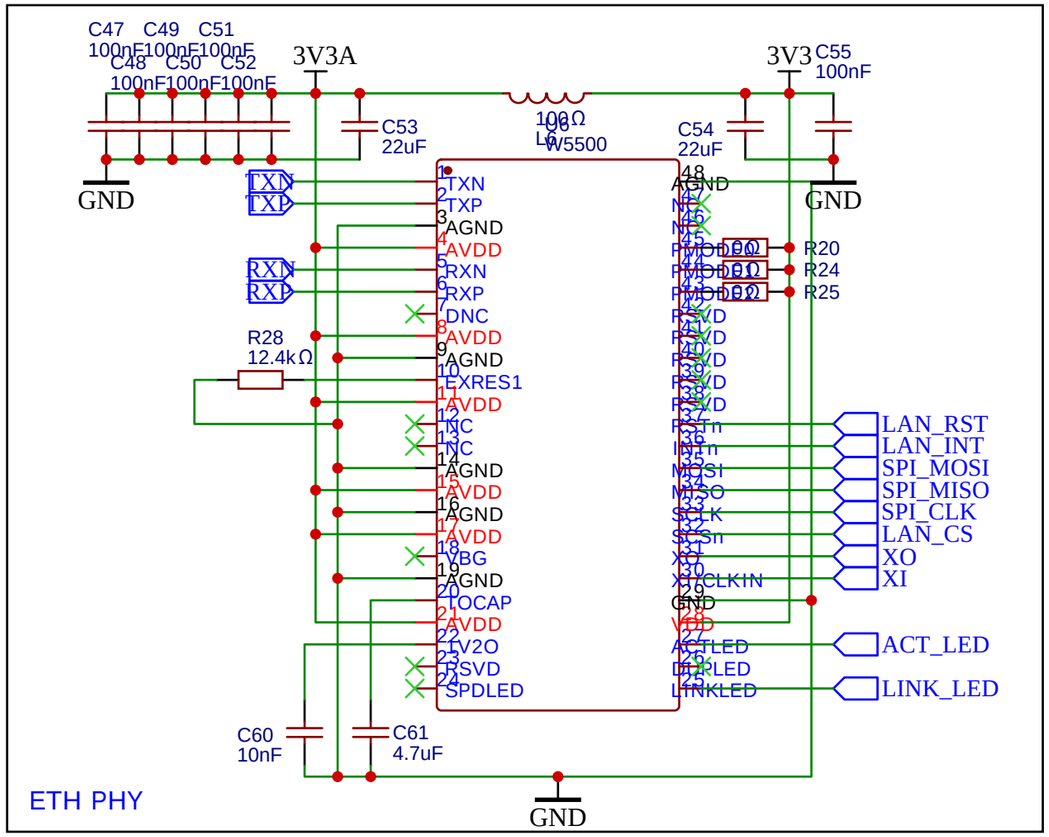

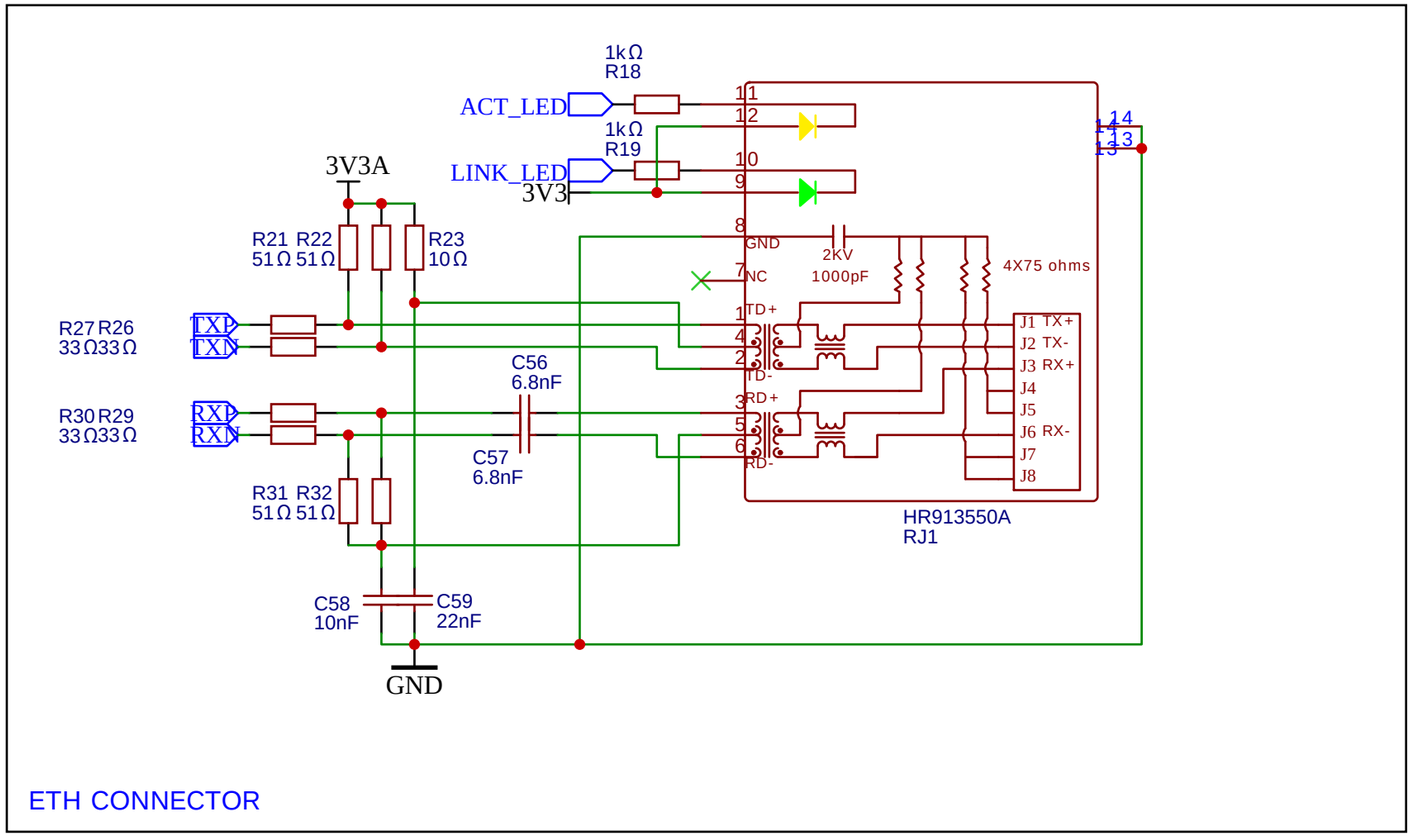

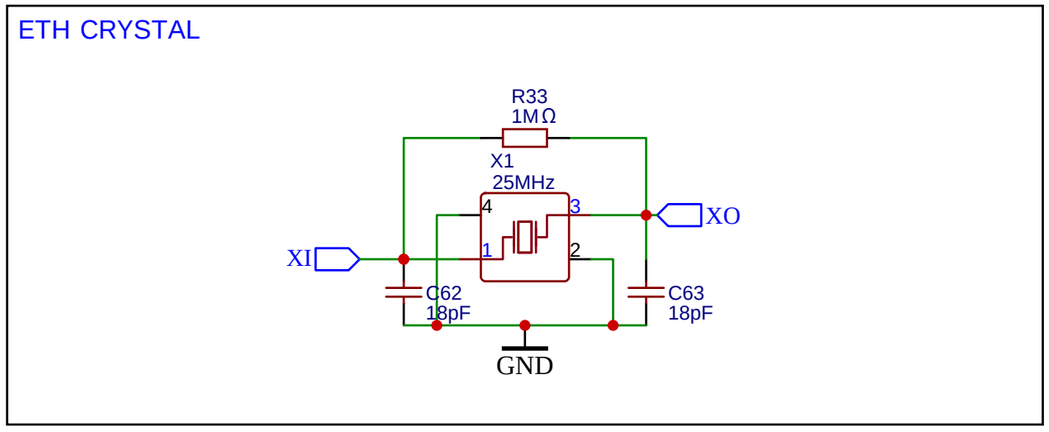

TITLE: Esparagus Audio Brick (Dual DAC)		REV: D
EasyEDA	Company: Sonocotta	Sheet: 3/3
	Date: 2026-05-18 Drawn By: andriy@sonocotta.com	