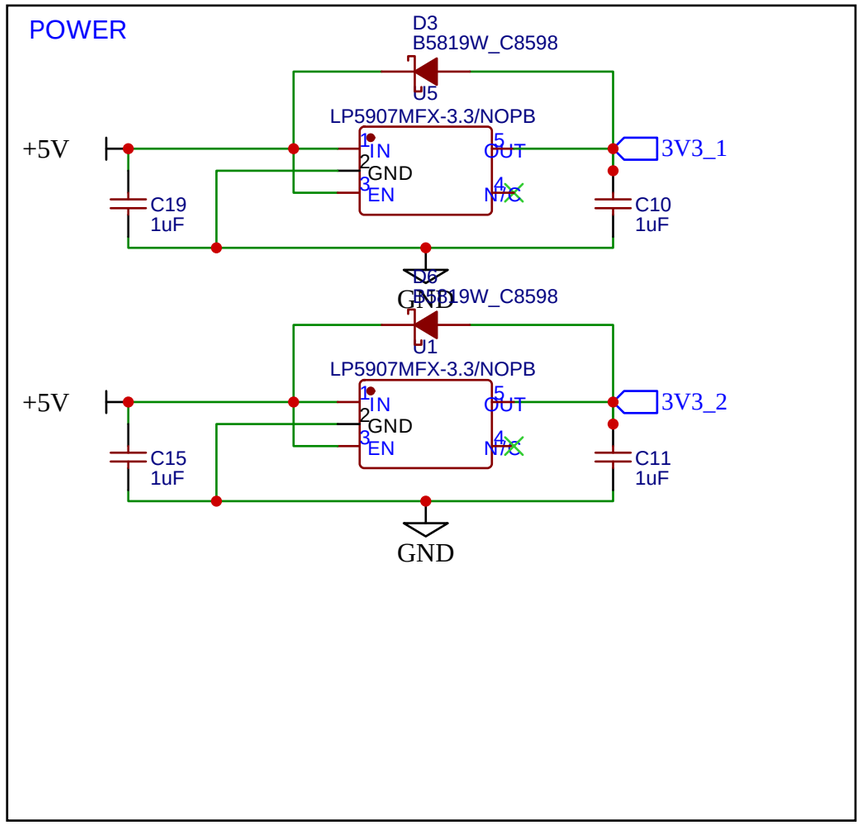

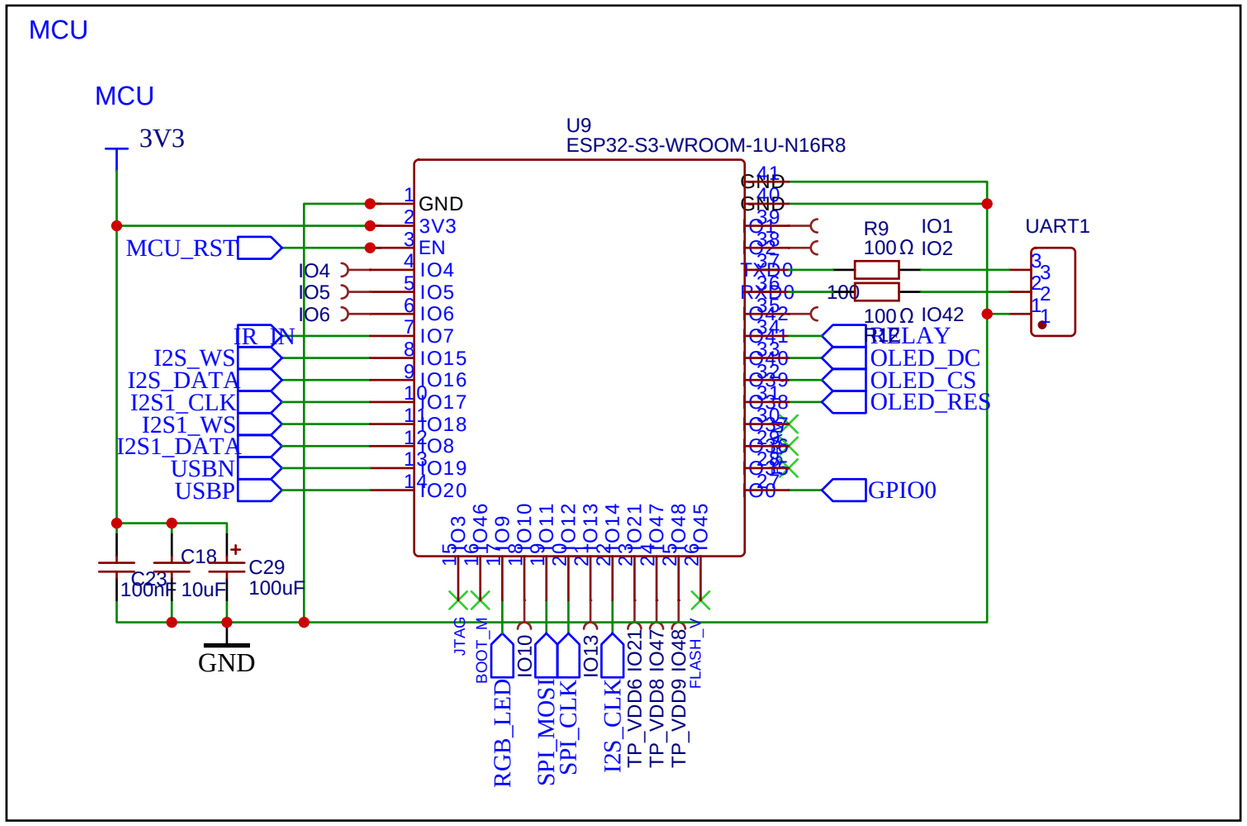

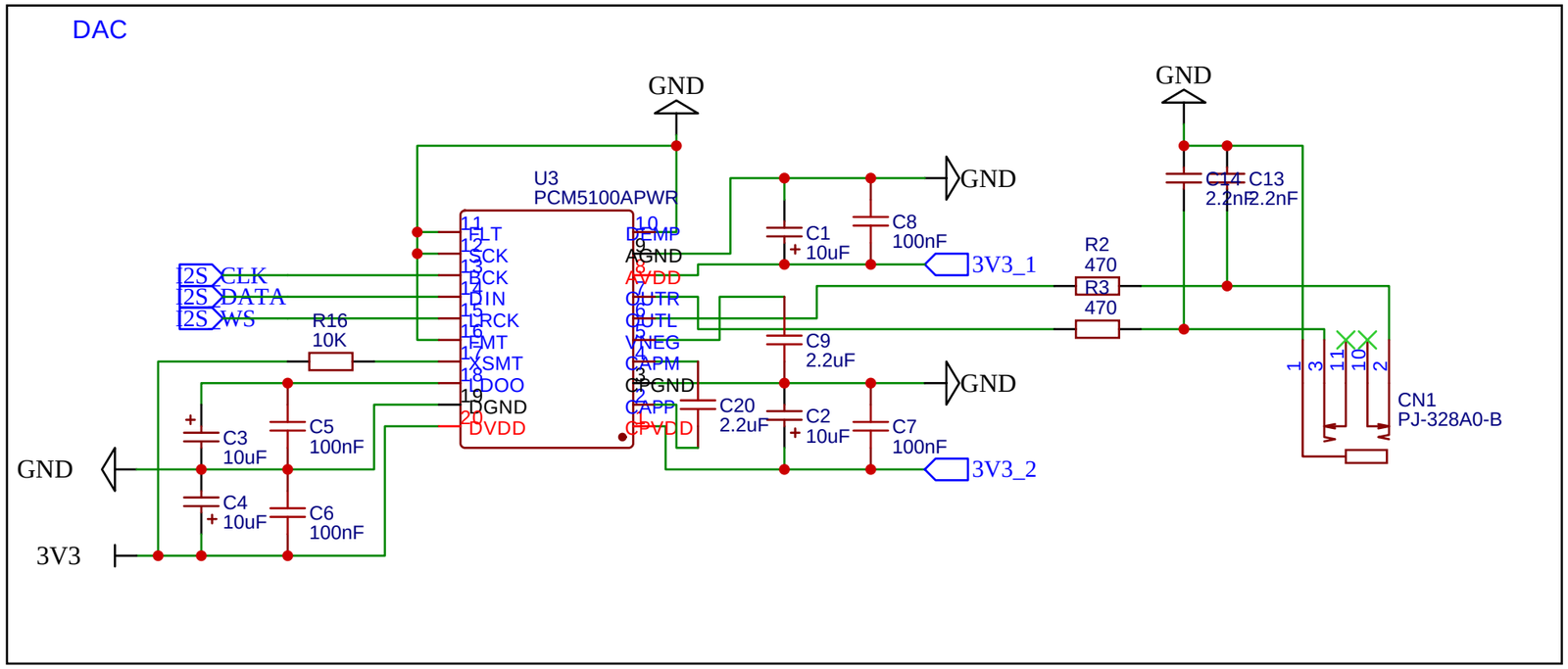

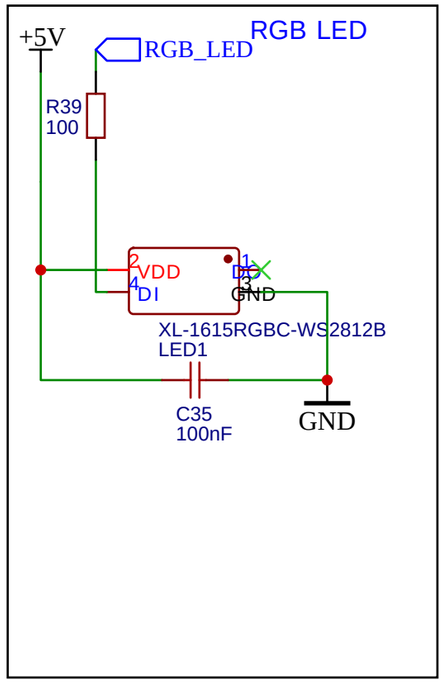

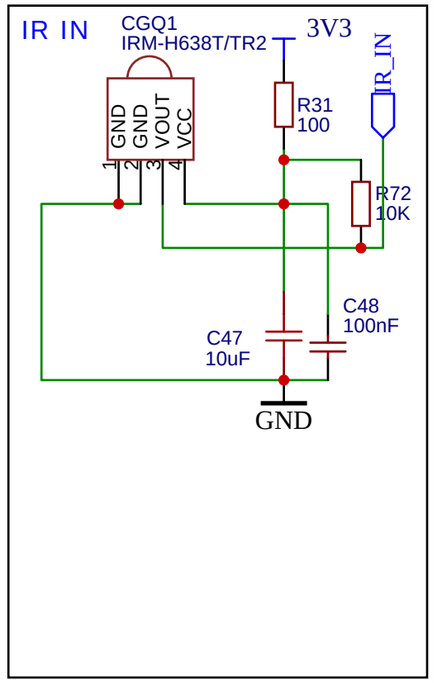

TITLE: HiFi Esparagus (S3)	REV: H
Company: Sonocotta	Sheet: 1/2
Date: 2026-02-10	Drawn By: andriy@sonocotta.com

EasyEDA

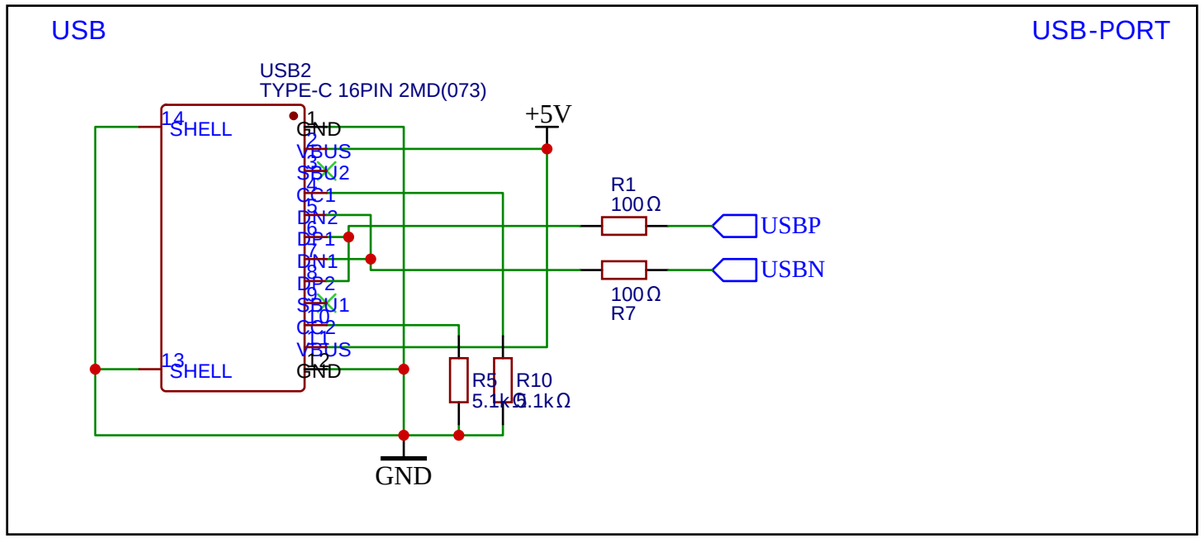

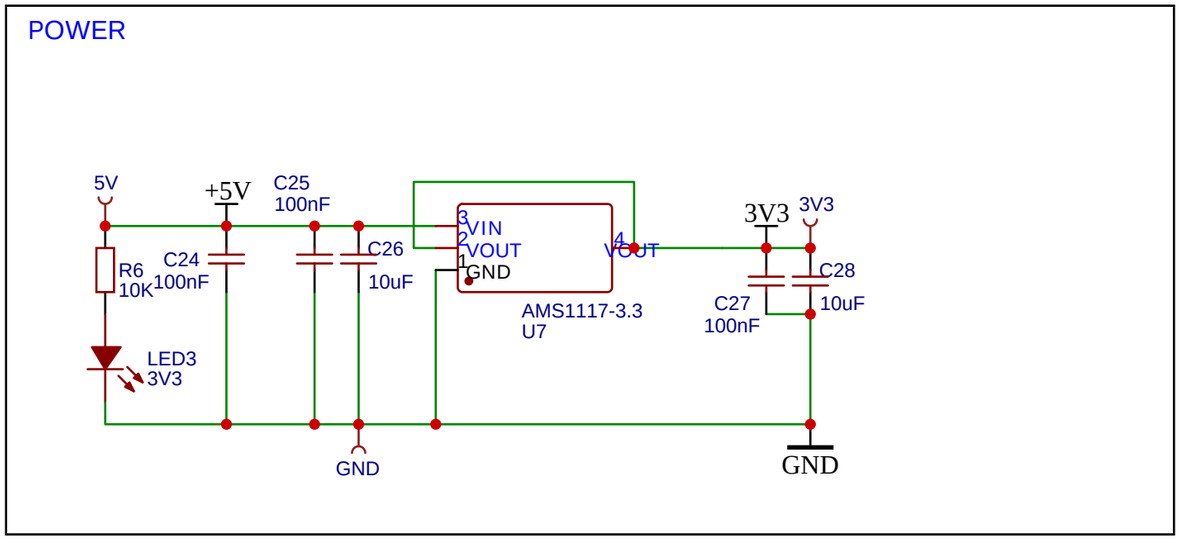

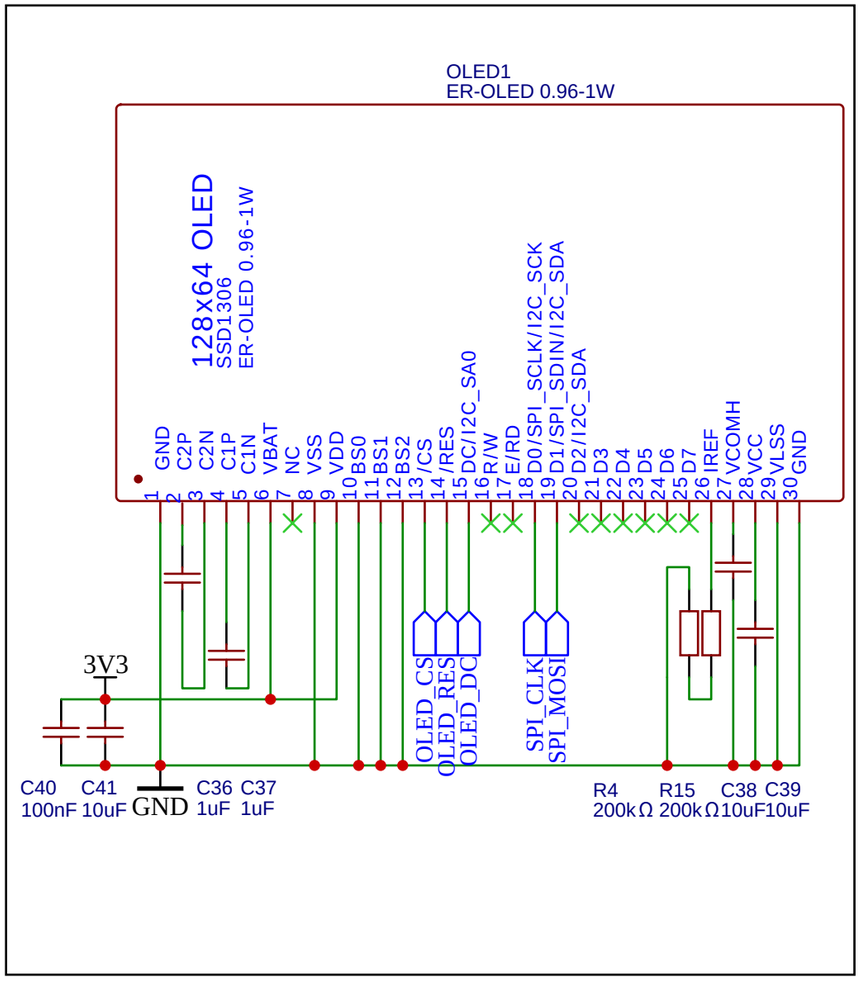

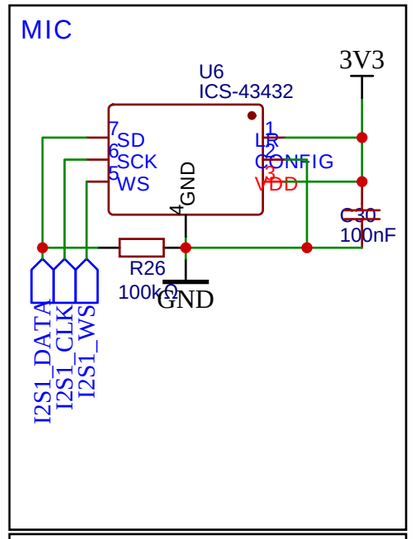

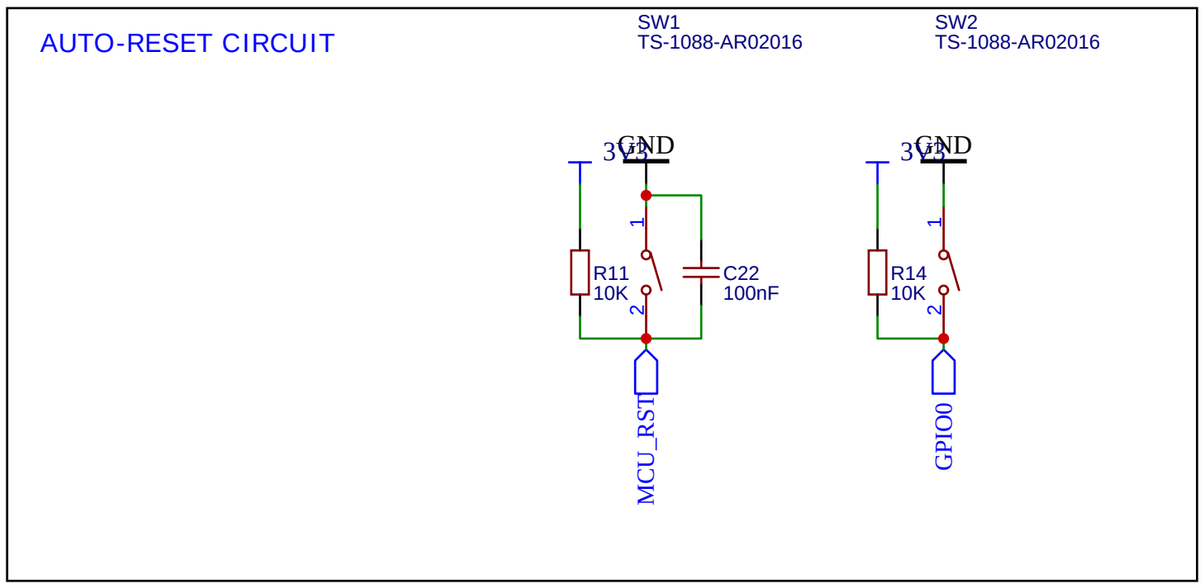

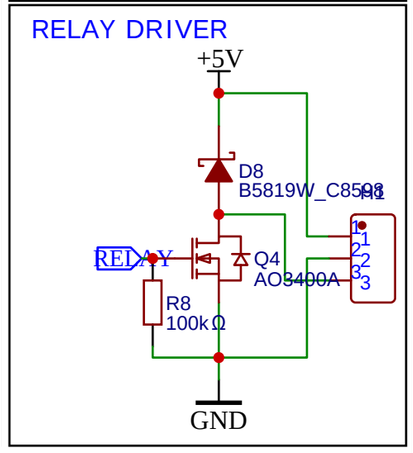

TITLE: HiFi Esparagus (S3)	REV: H
Company: Sonocotta	Sheet: 2/2
Date: 2026-02-10	Drawn By: andriy@sonocotta.com

EasyEDA