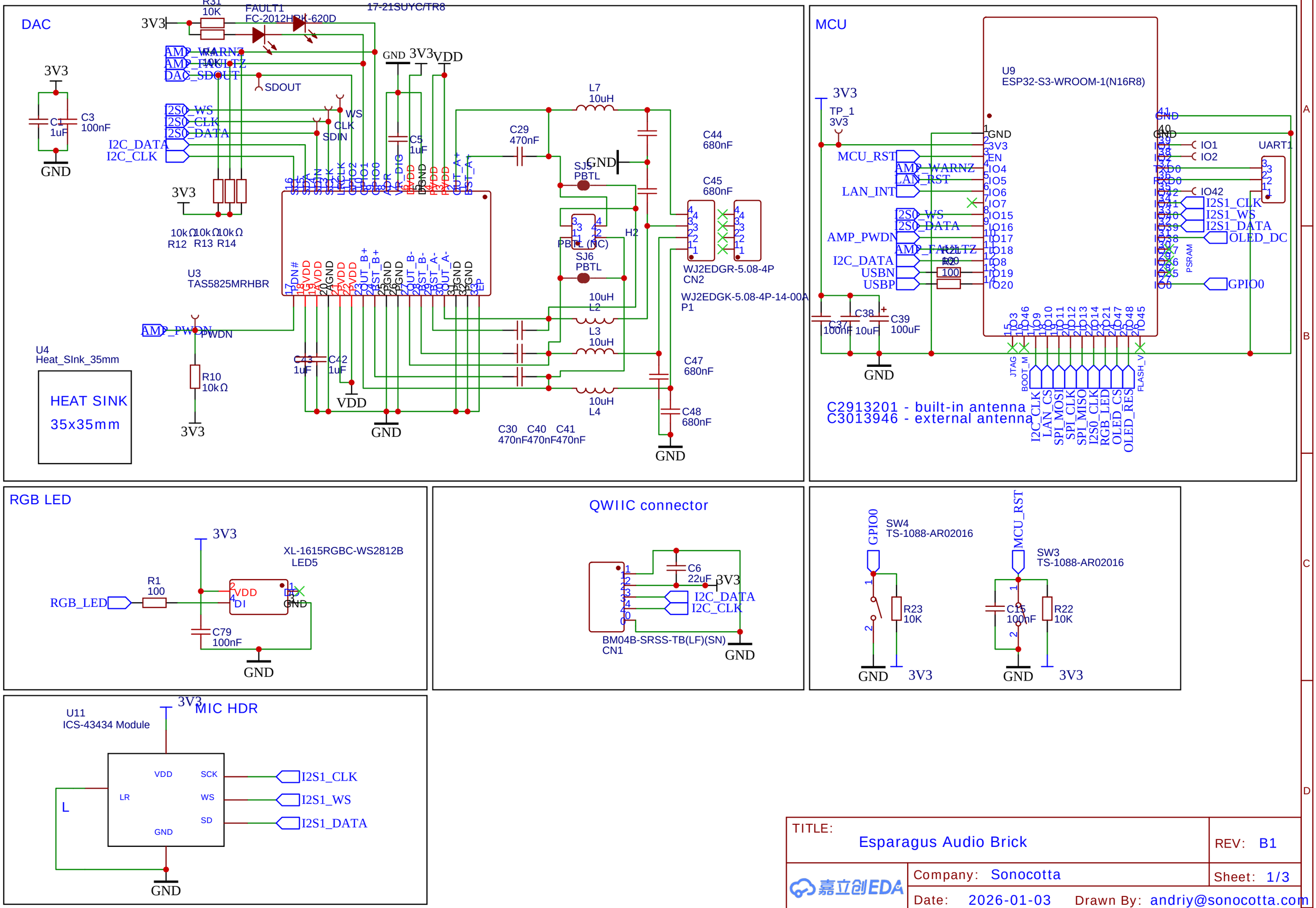

TITLE: Esparagus Audio Brick	REV: B1
Company: Sonocotta	Sheet: 1/3
Date: 2026-01-03	Drawn By: andriy@sonocotta.com

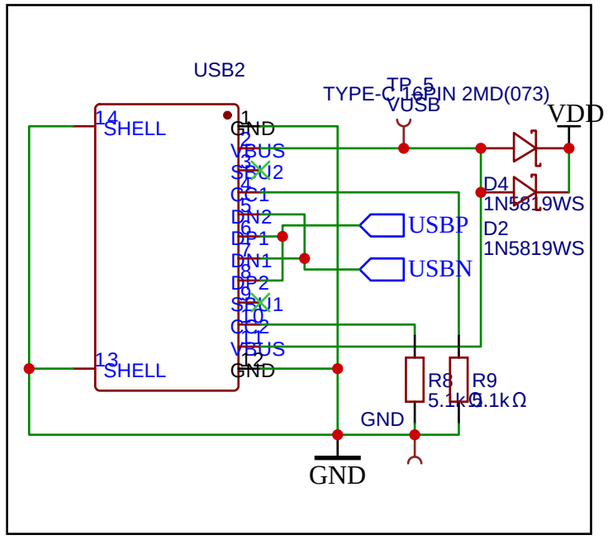

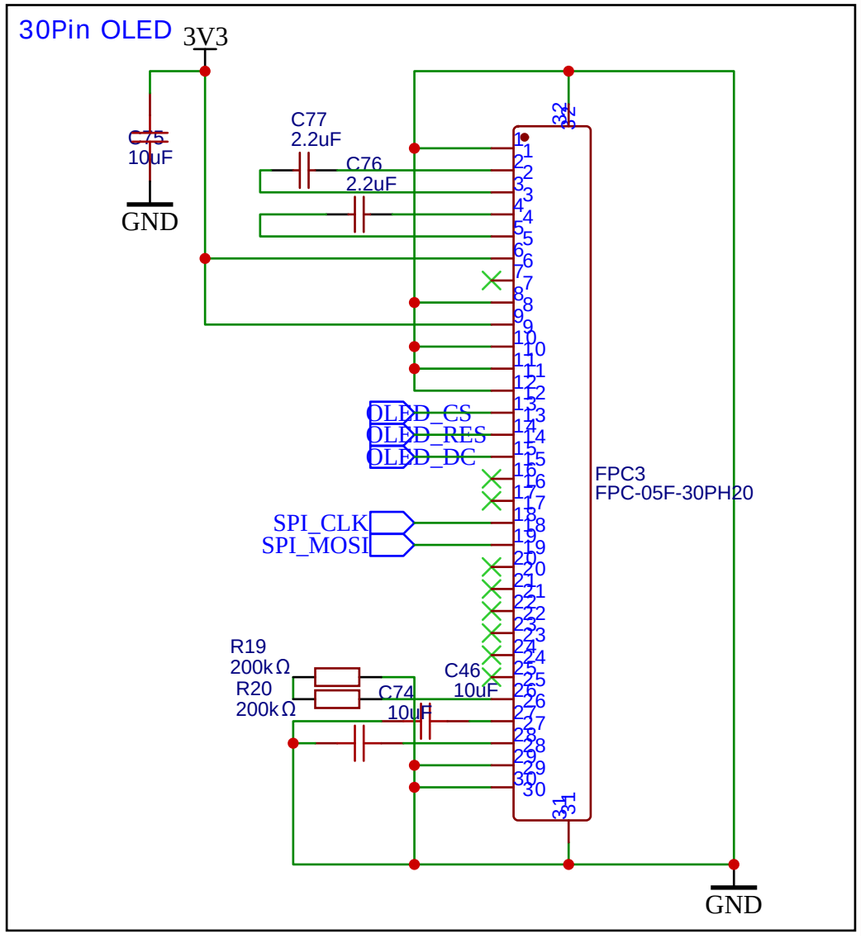

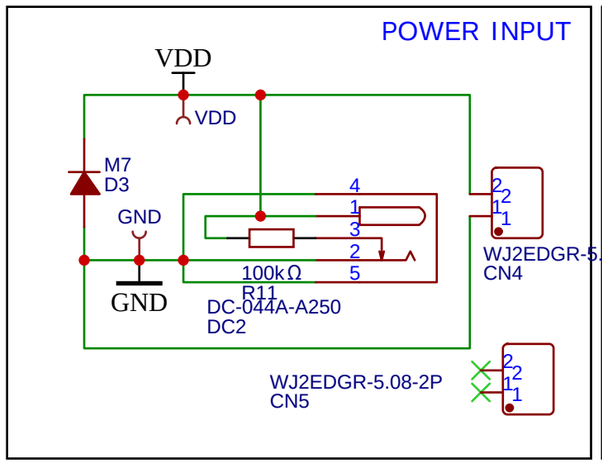

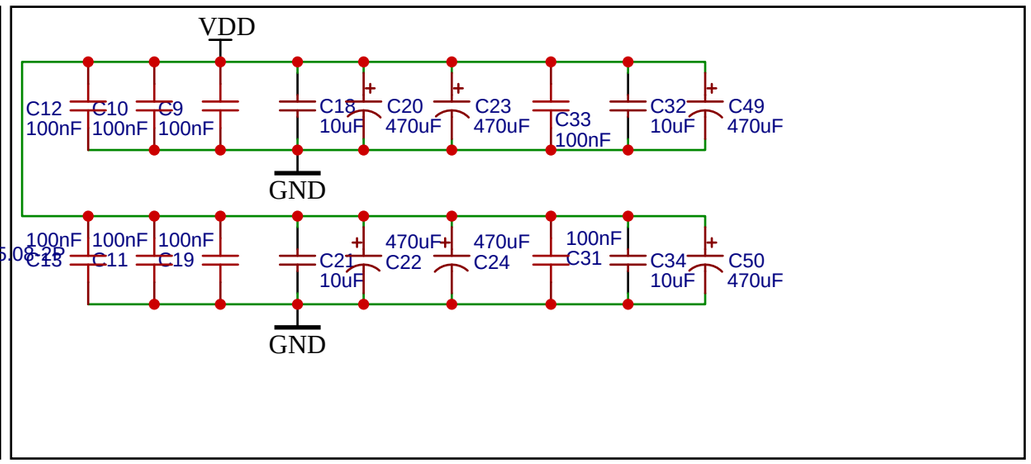

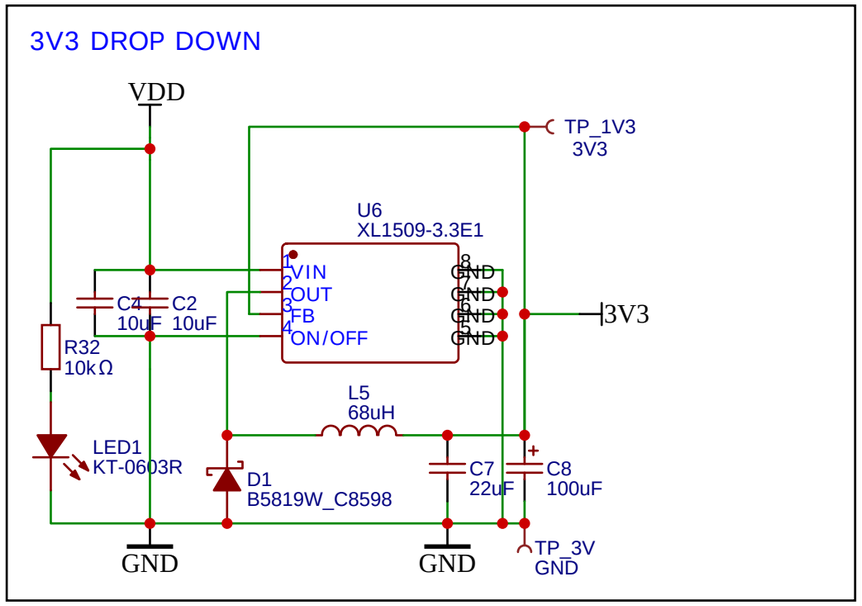

TITLE: Esparagus Audio Brick		REV: B1
EasyEDA	Company: Sonocotta	Sheet: 2/3
	Date: 2026-03-01 Drawn By: andriy@sonocotta.com	

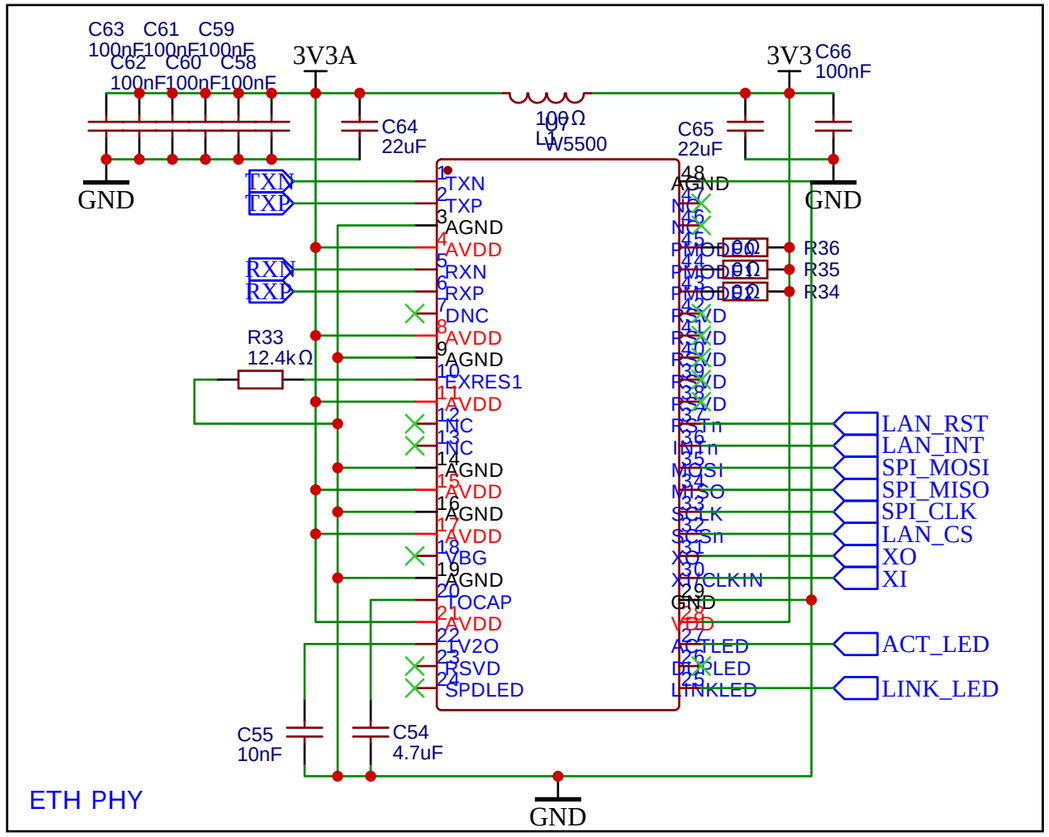

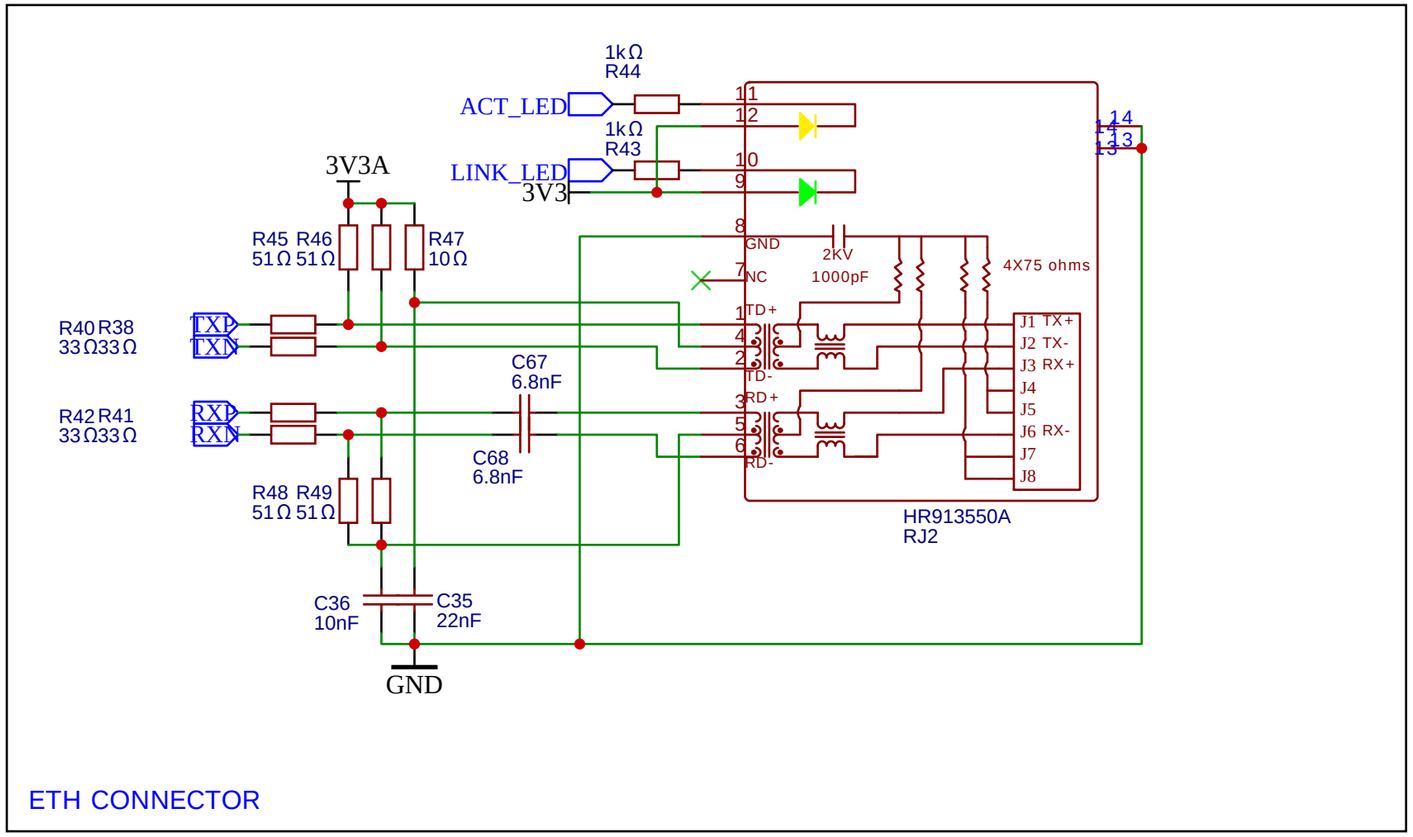

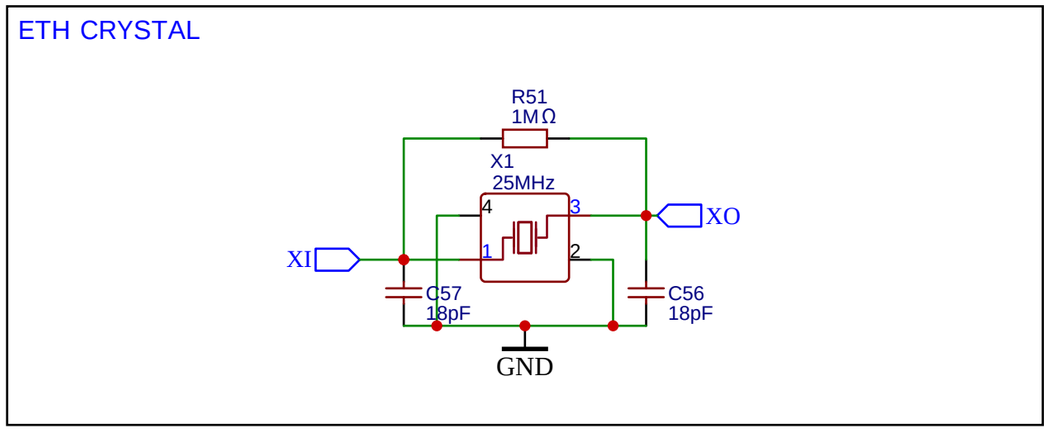

TITLE: Esparagus Audio Brick		REV: B1
EasyEDA	Company: Sonocotta	Sheet: 3/3
	Date: 2026-03-01 Drawn By: andriy@sonocotta.com	