Current sensors

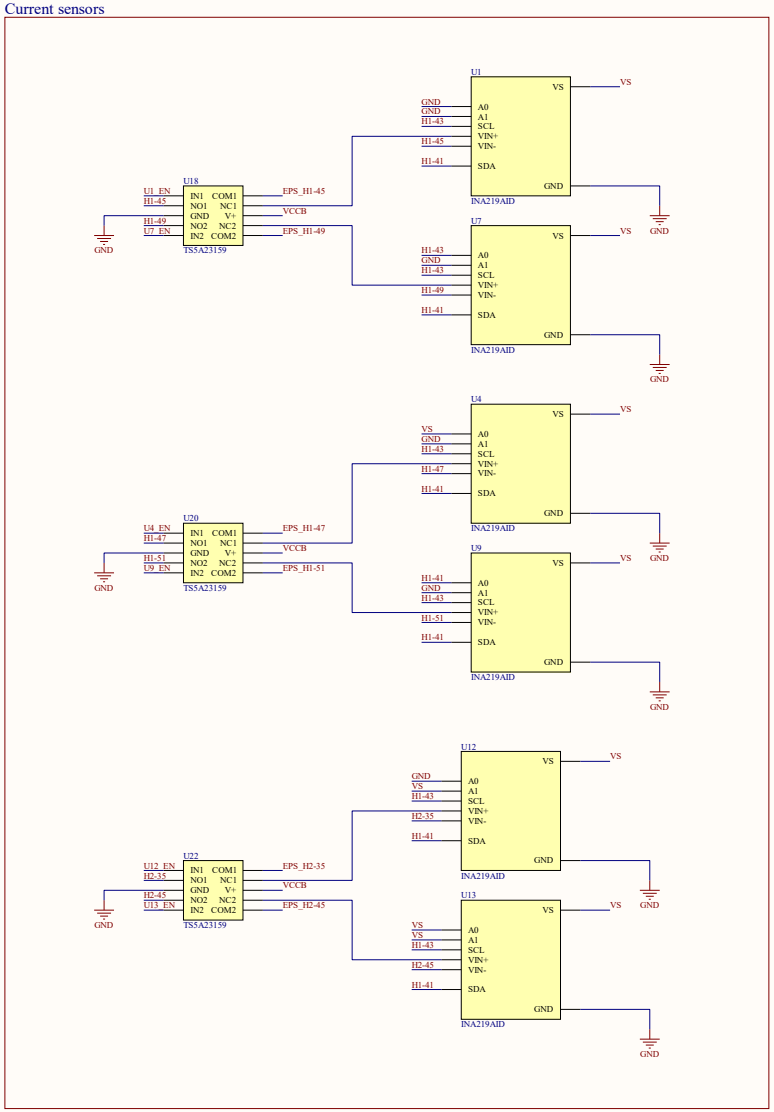

Bidirectional voltage-level translator for I²C

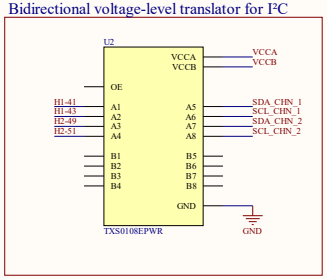

Ambient temperature measurement system

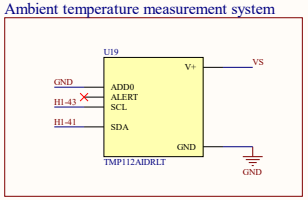

Components temperature measurement system

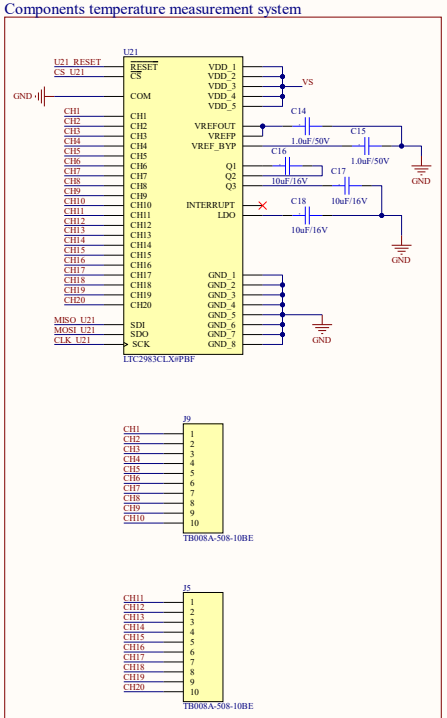

Generic bidirectional voltage-level translator

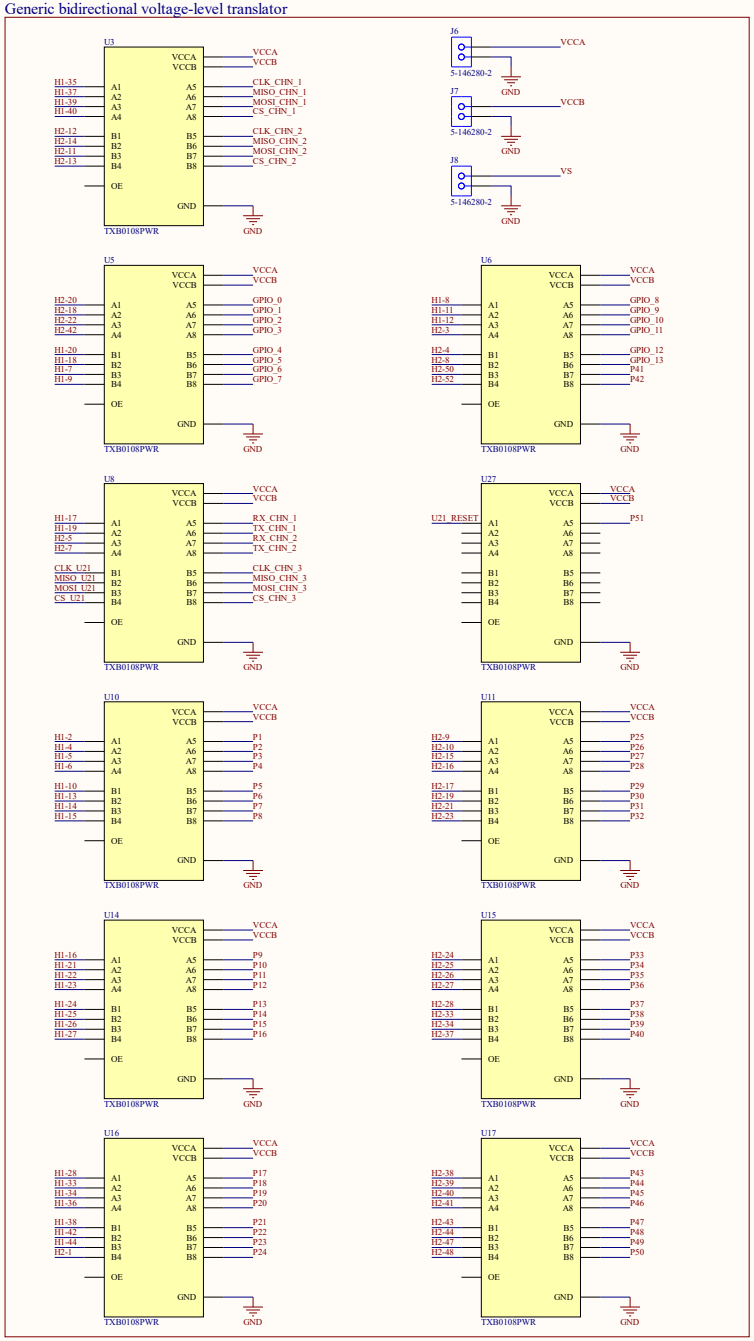

RS485 module

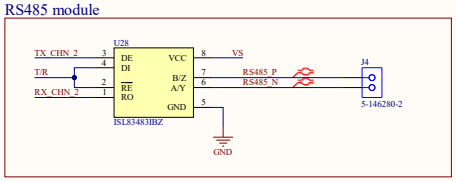

Title		
Size A2	Number	Revision
Date: 1/27/2021	Sheet of	
File: C:\Users\...\voltage_level_translators_schematic.SchDoc		