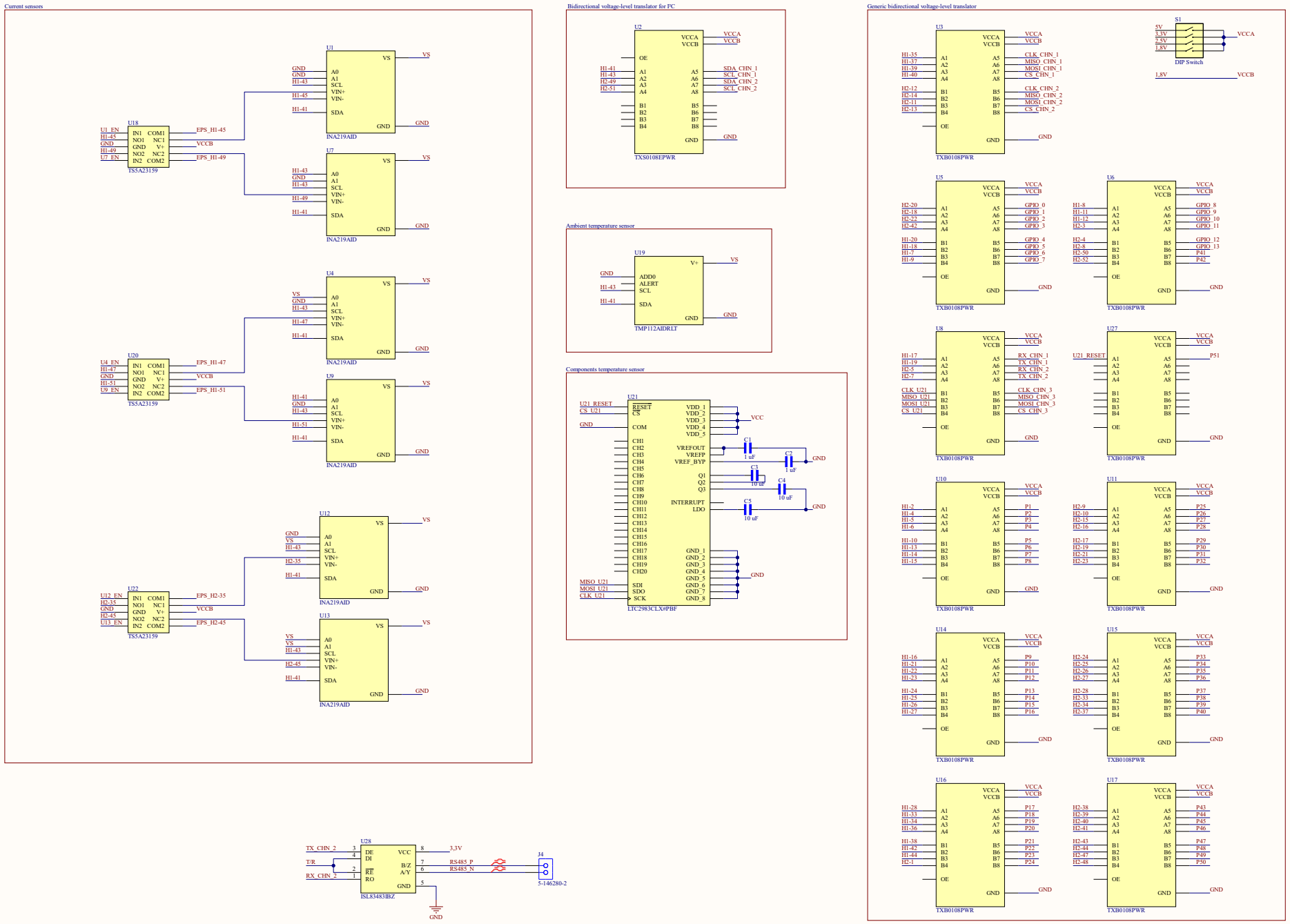
Current sensors
U18
TS5A23159
U1
INA219AID
U7
INA219AID
U20
TS5A23159
U4
INA219AID
U9
INA219AID
U22
TS5A23159
U12
INA219AID
U13
INA219AID
Bidirectional voltage-level translator for PC
U2
TXS0108EPWR
Ambient temperature sensor
U19
TMP112AIDRLT
Components temperature sensor
U21
LTC2983CLX#PBF
U28
ISL83483IBZ
J4
5-146280-2
Generic bidirectional voltage-level translator
U3
TXB0108PWR
S1
DIP Switch
U5
TXB0108PWR
U6
TXB0108PWR
U8
TXB0108PWR
U27
TXB0108PWR
U10
TXB0108PWR
U11
TXB0108PWR
U14
TXB0108PWR
U15
TXB0108PWR
U16
TXB0108PWR
U17
TXB0108PWR
Title
Size
A2
Number
Revision
Date: 1/17/2021
Sheet of
File: C:\Users\...\voltage_level_translators_schematic.SchDoc