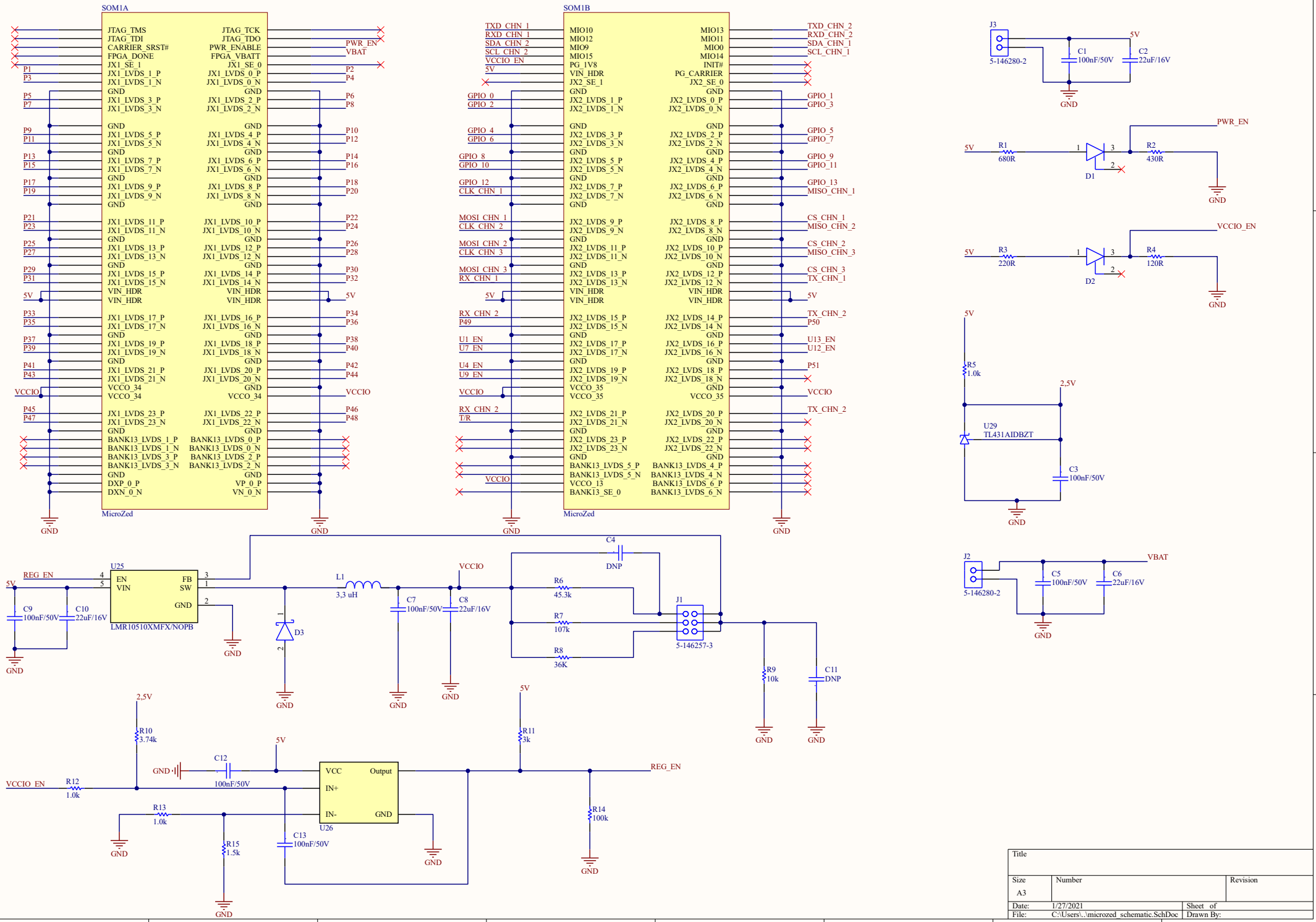

Title		
Size A3	Number	Revision
Date: 1/27/2021	Sheet of	
File: C:\Users\..\microzed_schematic.SchDoc	Drawn By:	