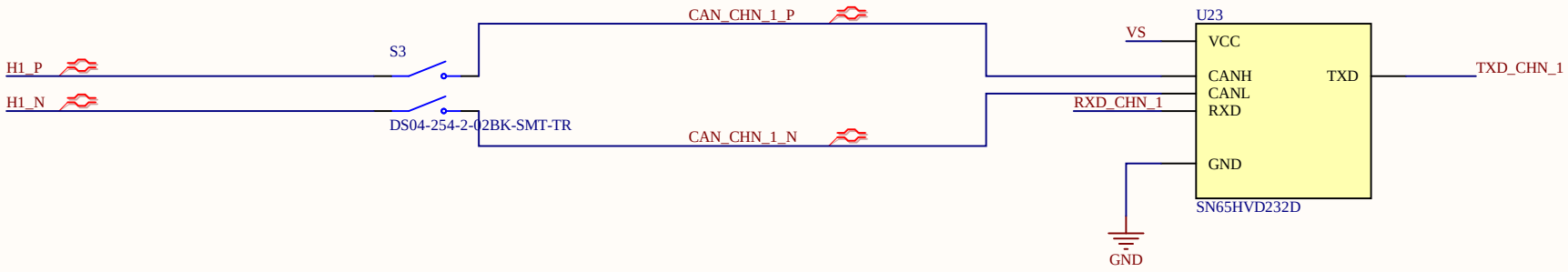

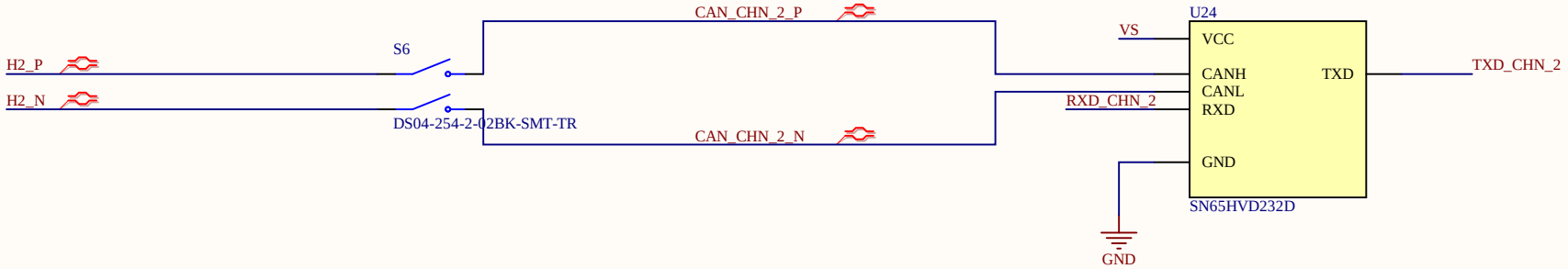

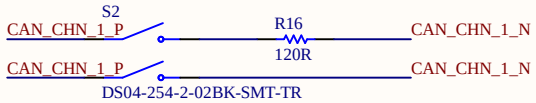

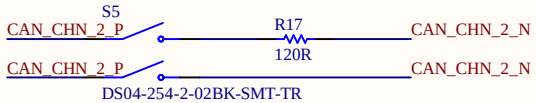

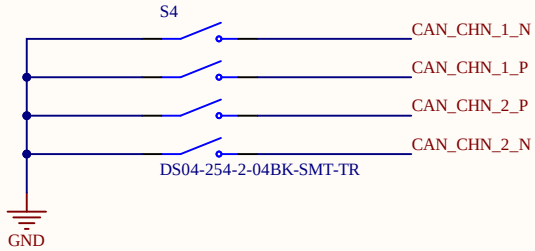

Title		
Size: A4	Number	Revision
Date: 3/09/2021		Sheet of
File: C:\Users\..\CAN_schematic.SchDoc		Drawn By:

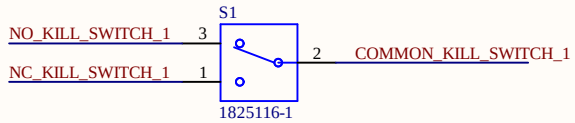

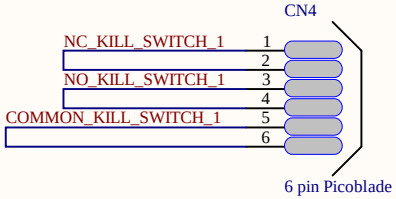

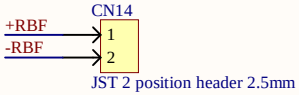

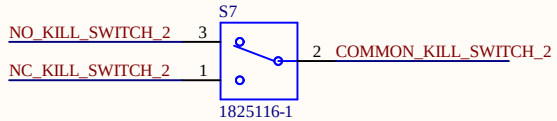

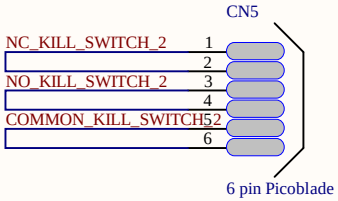

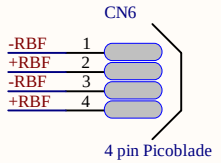

RBF	Switch(NC)	Switch(NO)	MOSFET	EPS POWER
1	X	X	OPEN	Cut-off
0	1	0	CLOSE	ON
0	0	1	OPEN	Cut-off (launch moment)

Title		
Size: A4	Number	Revision
Date: 3/09/2021		Sheet of
File: C:\Users\..\kill-switches_schematic.SchDoc		Drawn By:

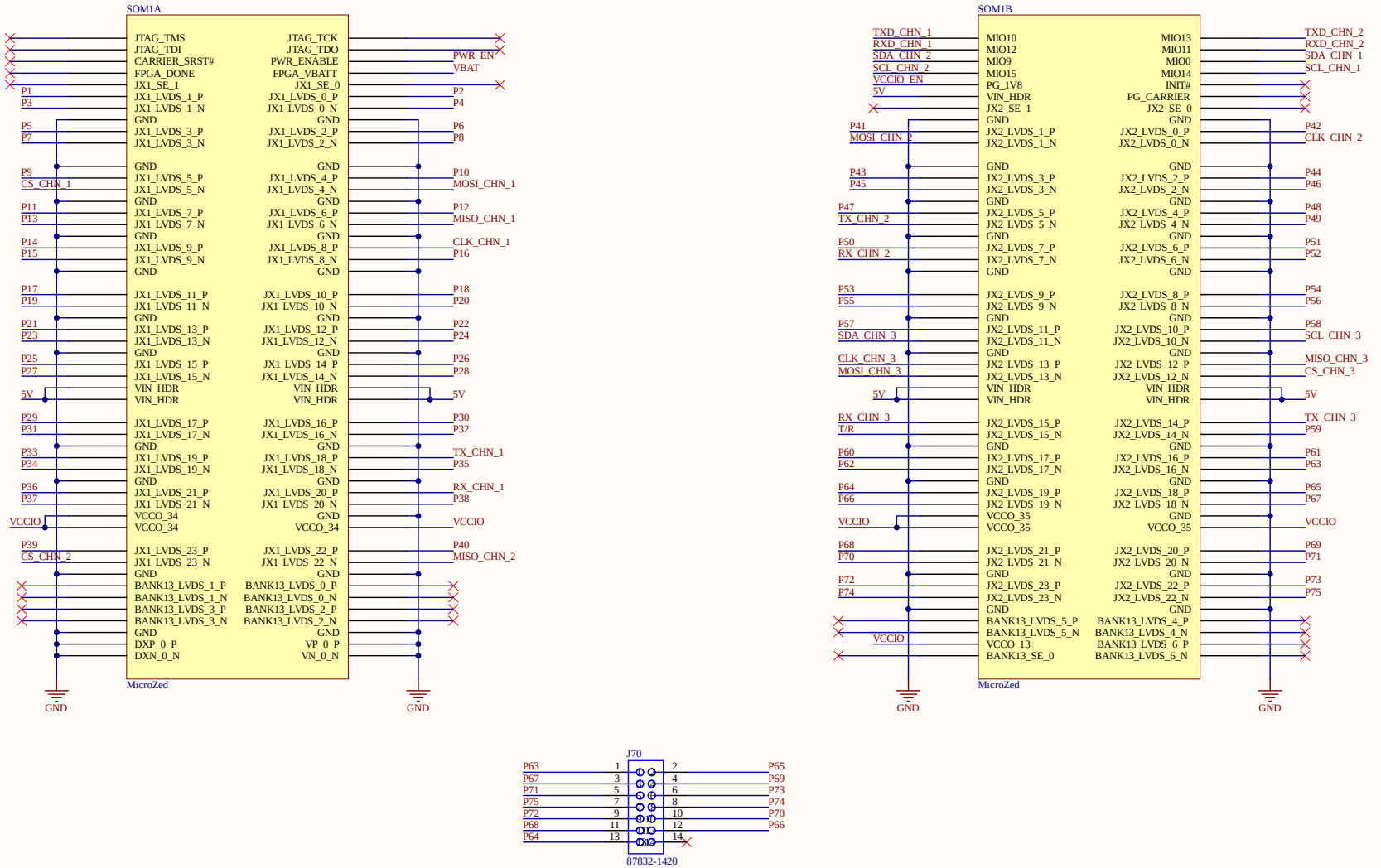

Title		
Size: A3	Number	Revision
Date: 3/09/2021		Sheet of
File: C:\Users\..\microzed_schematic.SchDoc		Drawn By:

PC104 slot Nº1 (EPS)

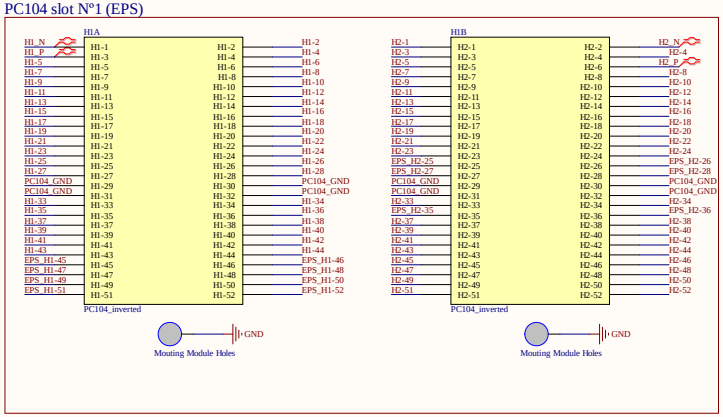

PC104 slot Nº2 (CAN bus tests)

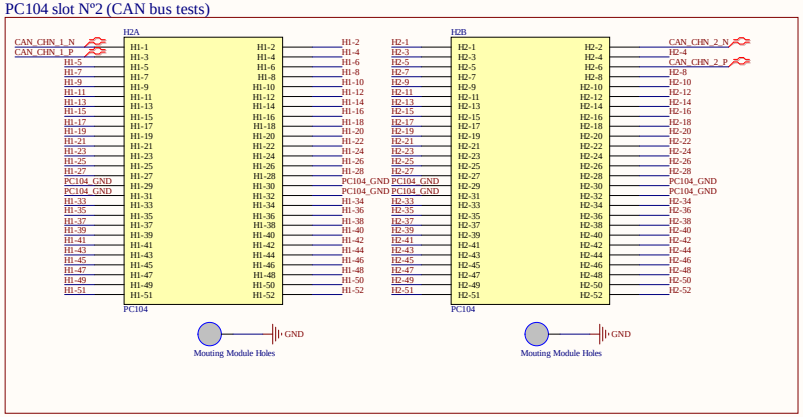

PC104 slot Nº3

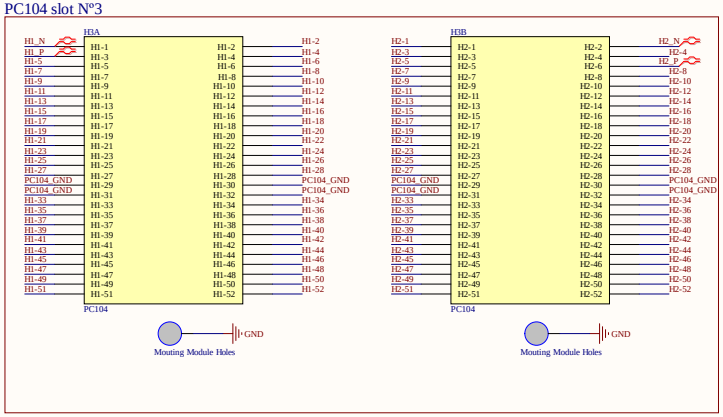

PC104 slot Nº4

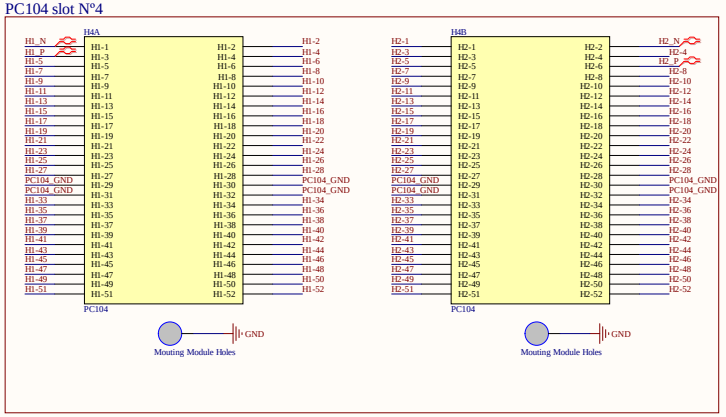

PC104 slot Nº5

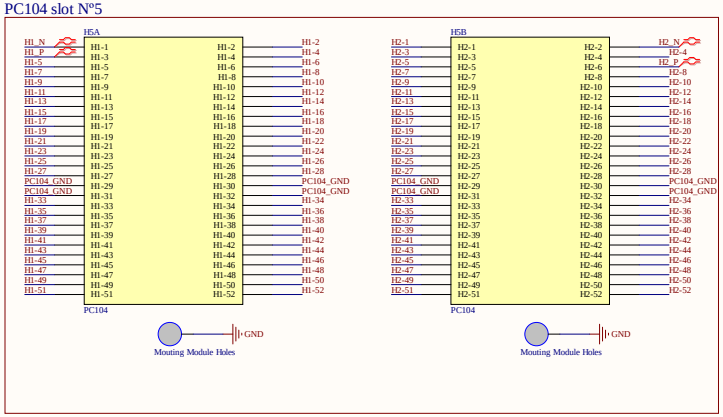

PC104 slot Nº1

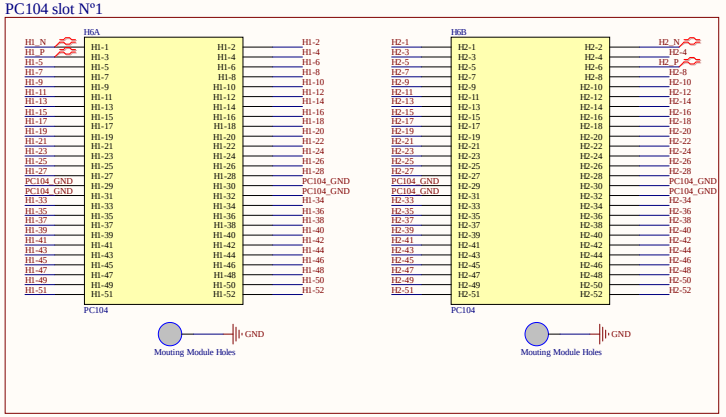

Title		
Size: A2	Number	Revision
Date: 3/09/2021	Sheet of	
File: C:\Users\...\PC104_schematic.SchDoc	Drawn By:	

Reference signals

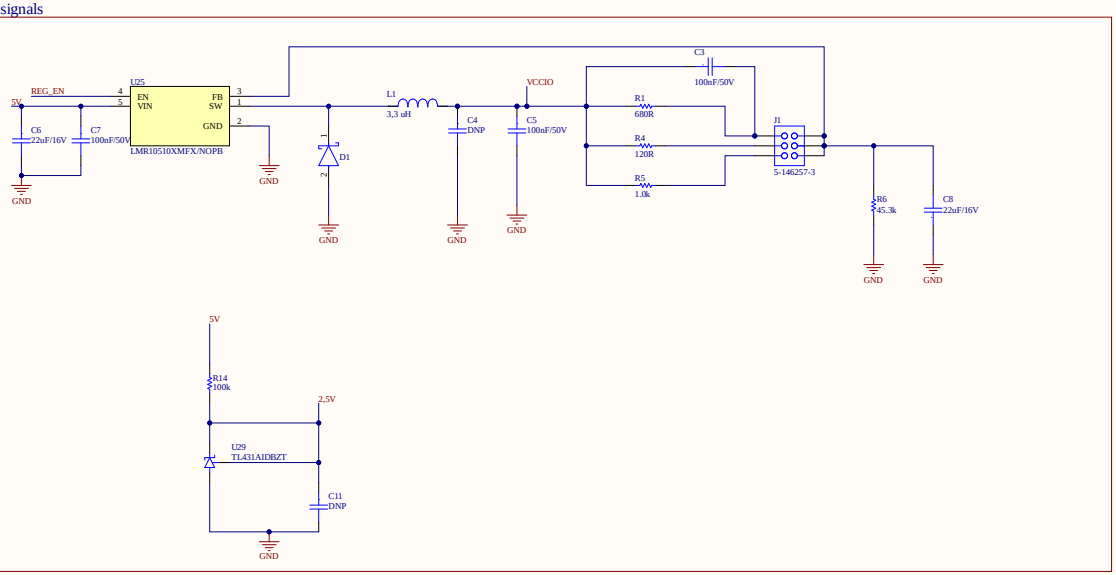

Enables

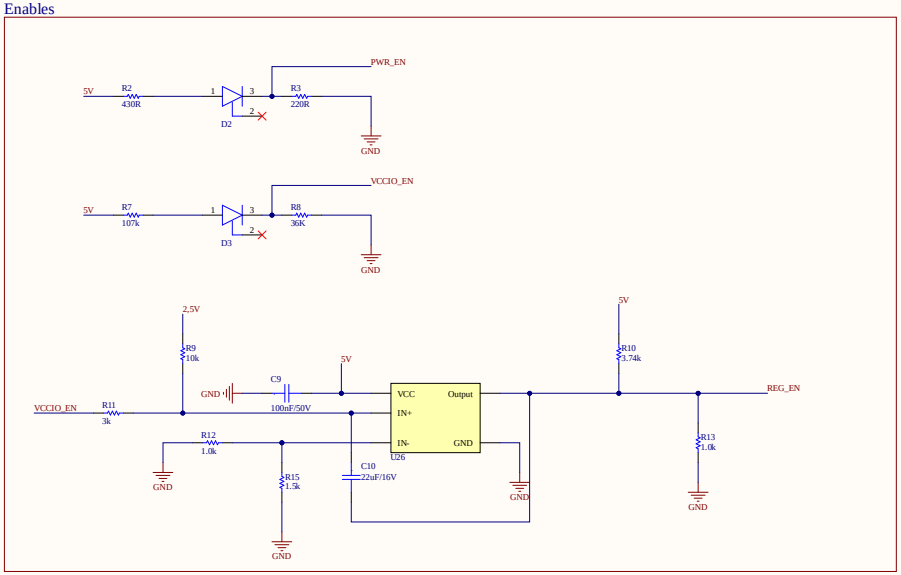

Batteries charge circuit

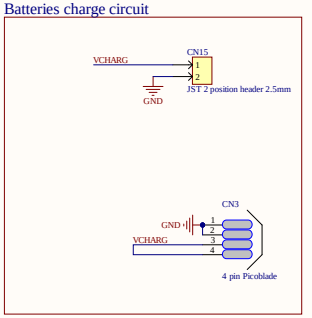

External voltage sources

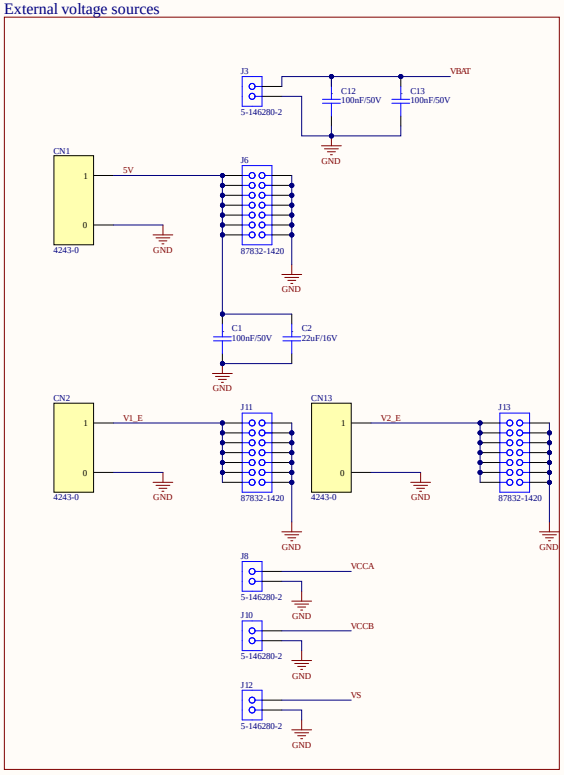

Title		
Size: A2	Number	Revision
Date: 3/09/2021		Sheet of
File: C:\Users\...\power_schematic.SchDoc		Drawn By:

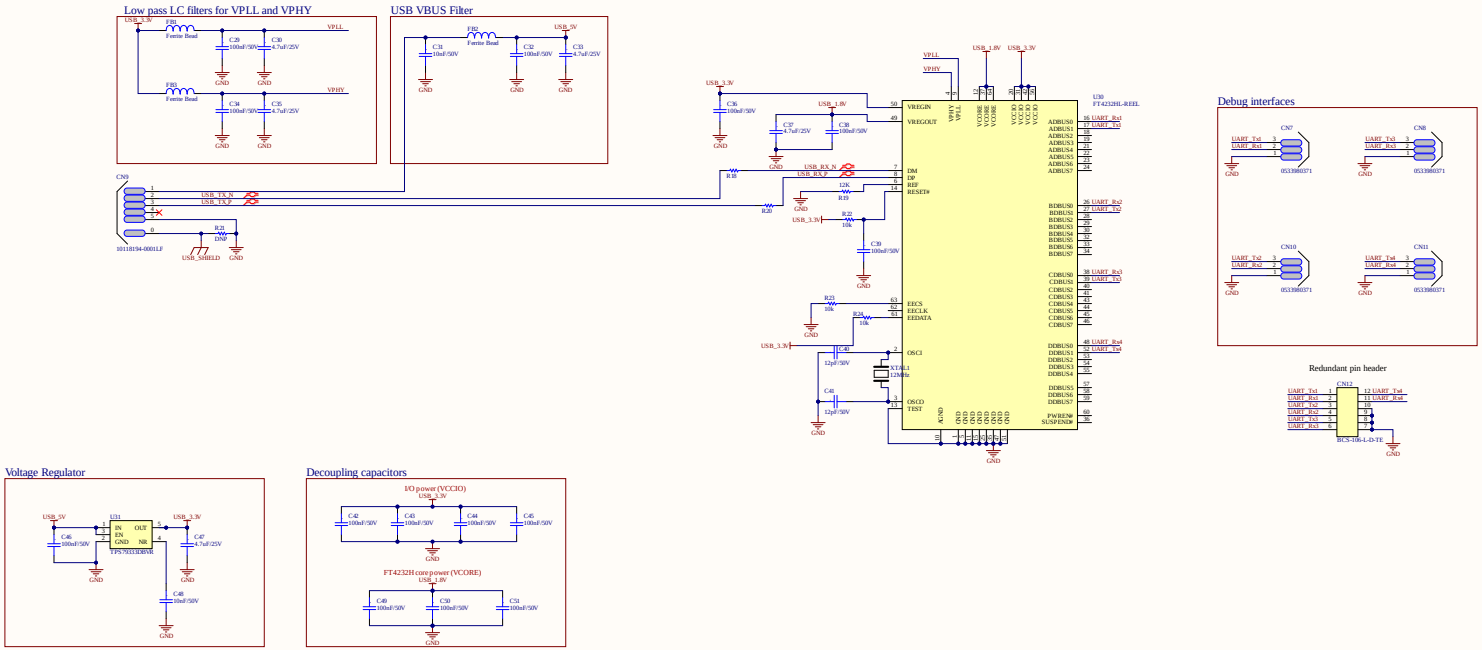

Title			
Size	Number		Revision
A1			
Date:	3/09/2021	Sheet of	
File:	C:\Users\...\USB_debug_schematic.SchDoc	Drawn By:	

Current sensors

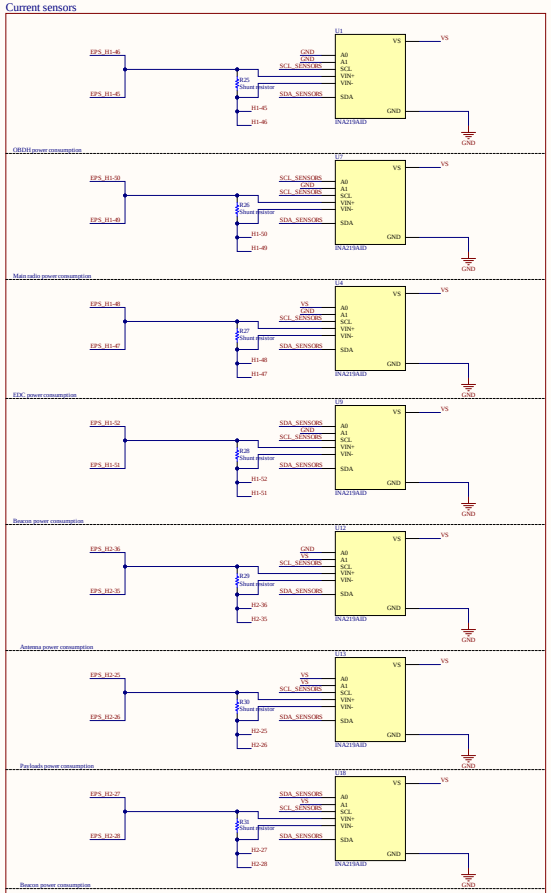

The EPS powers up the modules with two trails in parallel. So to measure the total power delivered, each pair needs to bee shorted together. A larger trail can be used in this section. After that, the two trails can be divided again, with the original width

Bidirectional voltage-level translator for I²C

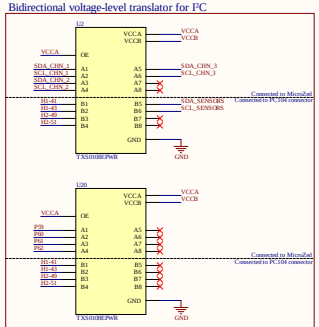

In the application report, Effects of External Pullup and Pulldown Resistors on TXS and TXB Devices, made by TI, it is said that the internal pullup on the TXS device won't affect the VOL and VOH significantly. But the current increases:

https://www.ti.com/lit/ug/scrut/scrut.pdf?ts=1612102738ef_ref=https%2GA%2GF%2Fsearch.ti.com%2F

Components temperature measurement system

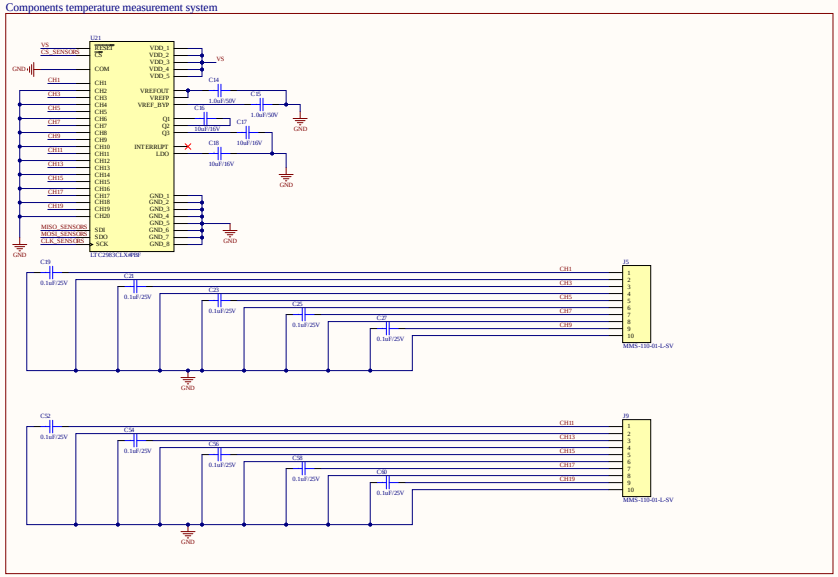

Generic bidirectional voltage-level translator

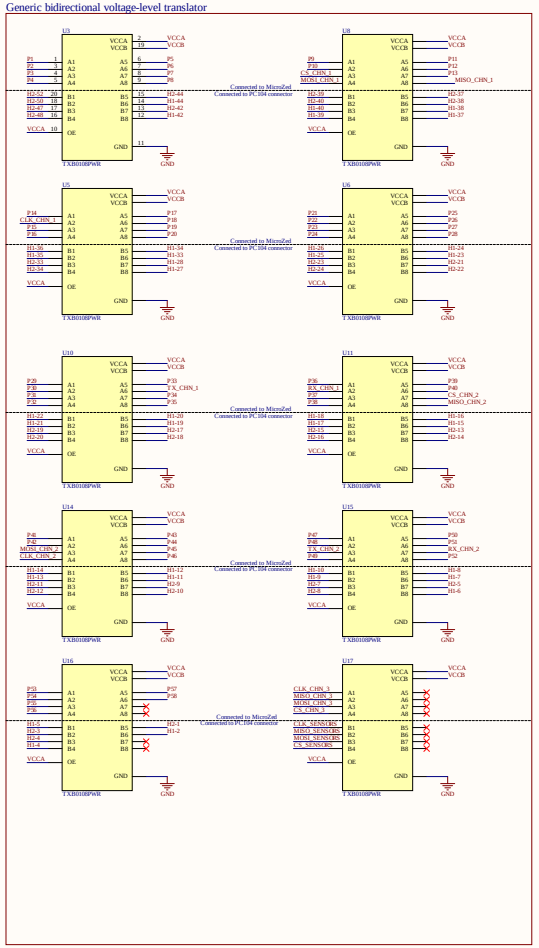

RS485 module

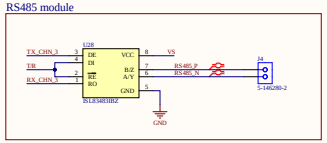

Ambient temperature measurement system

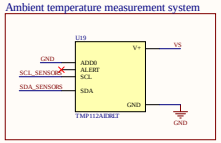

Title		
Size: A1	Number	Revision
Date: 8/09/2021	Sheet of	
File: C:\Users\...\voltage_level_translators_schematics.pdf	Drawn By:	