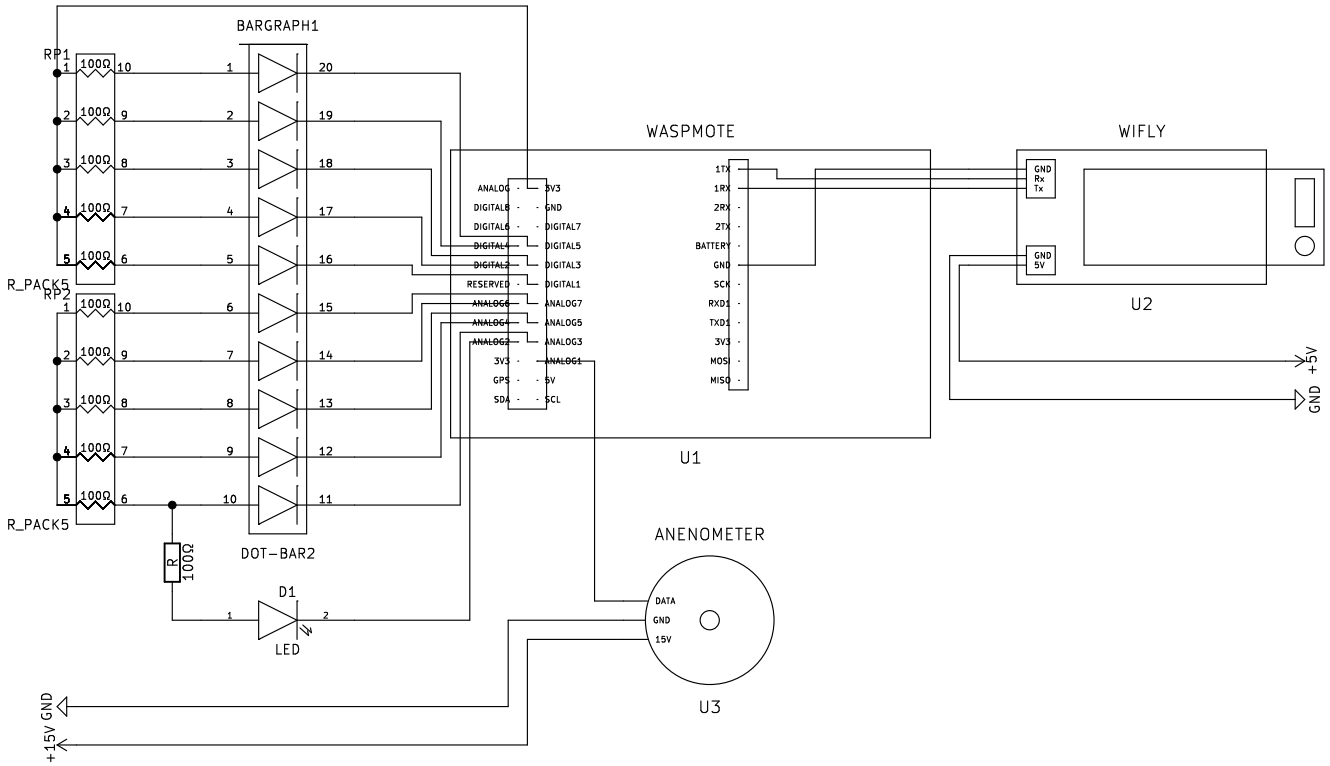

Raed Abdennadher
Orphée Antoniadis
Steven Liatti

Sheet: /
File: smartwindows.sch

Title: Smart Windows

Size: A4	Date: 2016-09-12	Rev:
KiCad E.D.A. eeschema 4.0.4-stable		Id: 1/1