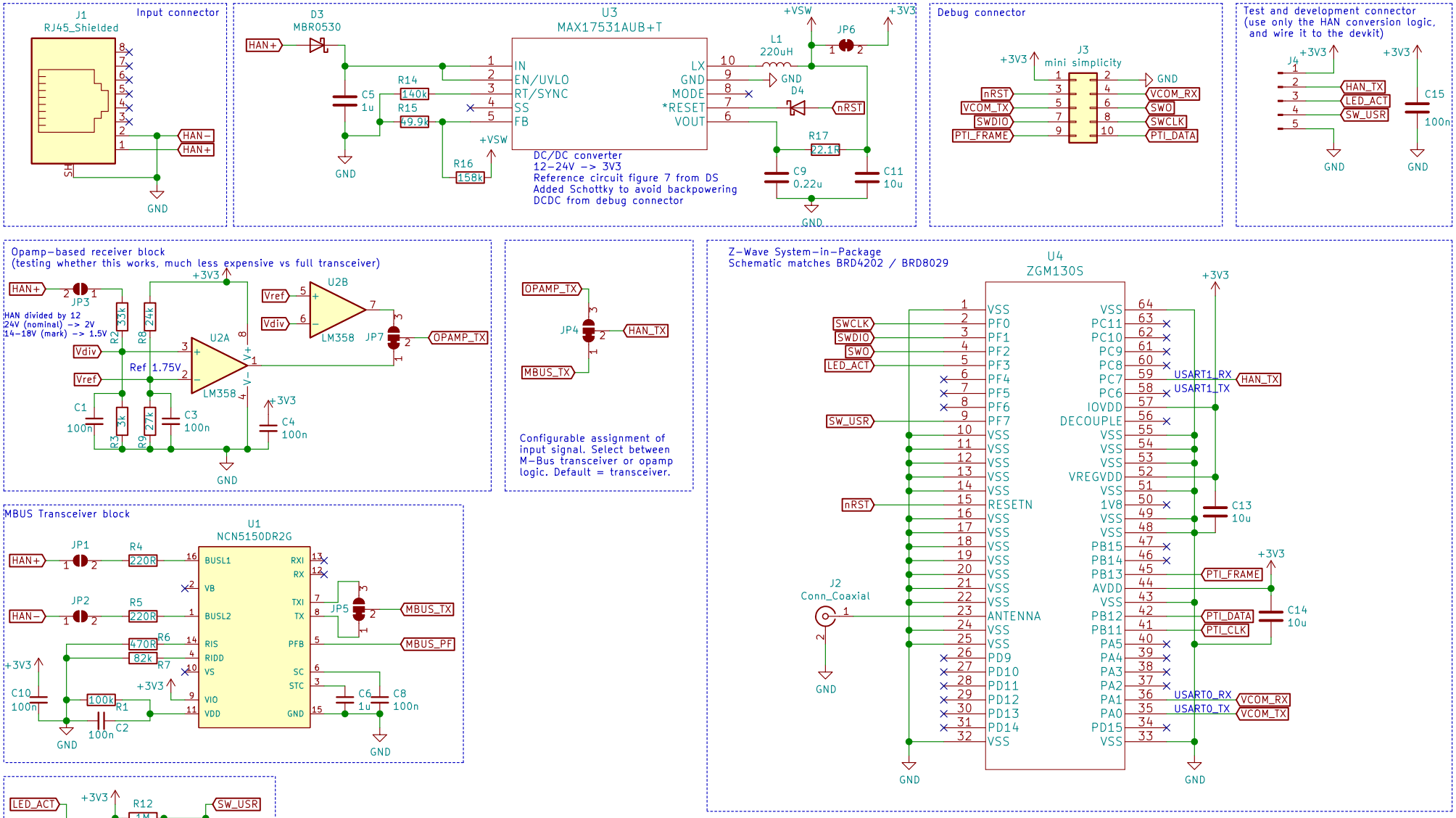

github.com/stevew817
stevenontherocks.com

CC−BY design by Steven Cooreman

Sheet: /
File: AMS2ZWAVE.sch

Title: Norwegian HAN to Z−Wave adapter

Size: A4	Date: 2020−12−23	**Rev: 1**
KiCad E.D.A. kicad (5.1.8)−1		Id: 1/1