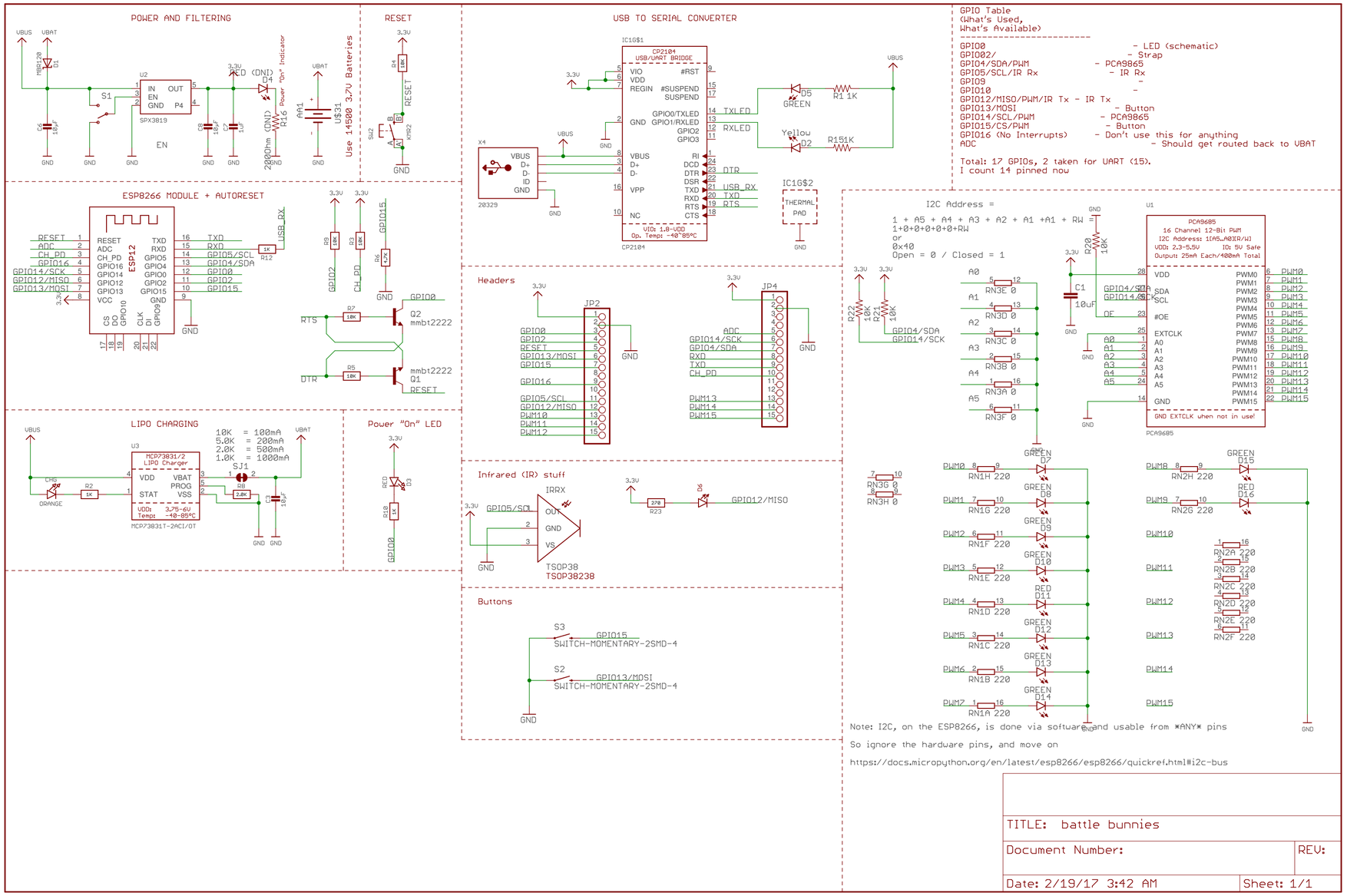
POWER AND FILTERING
RESET
USB TO SERIAL CONVERTER
GPIO Table
(What's Used,
What's Available)
GPIO0 - LED (schematic)
GPIO2/ - Strap
GPIO4/SDA/PWM - PCA9865
GPIO5/SCL/IR Rx - IR Rx
GPIO9 -
GPIO10 -
GPIO12/MISO/PWM/IR Tx - IR Tx
GPIO13/MOSI - Button
GPIO14/SCL/PWM - PCA9865
GPIO15/CS/PWM - Button
GPIO16 (No Interrupts) - Don't use this for anything
ADC - Should get routed back to VBAT
Total: 17 GPIOs, 2 taken for UART (15).
I count 14 pinned now
Use 14500 3.7V Batteries
ESP8266 MODULE + AUTORESET
LIPO CHARGING
10K = 100mA
5.0K = 200mA
2.0K = 500mA
1.0K = 1000mA
Power "On" LED
Headers
Infrared (IR) stuff
Buttons
I2C Address =
1 + A5 + A4 + A3 + A2 + A1 +A1 + RW
1+0+0+0+0+0+RW
or
0x40
Open = 0 / Closed = 1
Note: I2C, on the ESP8266, is done via software and usable from *ANY* pins
So ignore the hardware pins, and move on
https://docs.micropython.org/en/latest/esp8266/esp8266/quickref.html#i2c-bus
TITLE: battle bunnies
Document Number:
REV:
Date: 2/19/17 3:42 AM
Sheet: 1/1