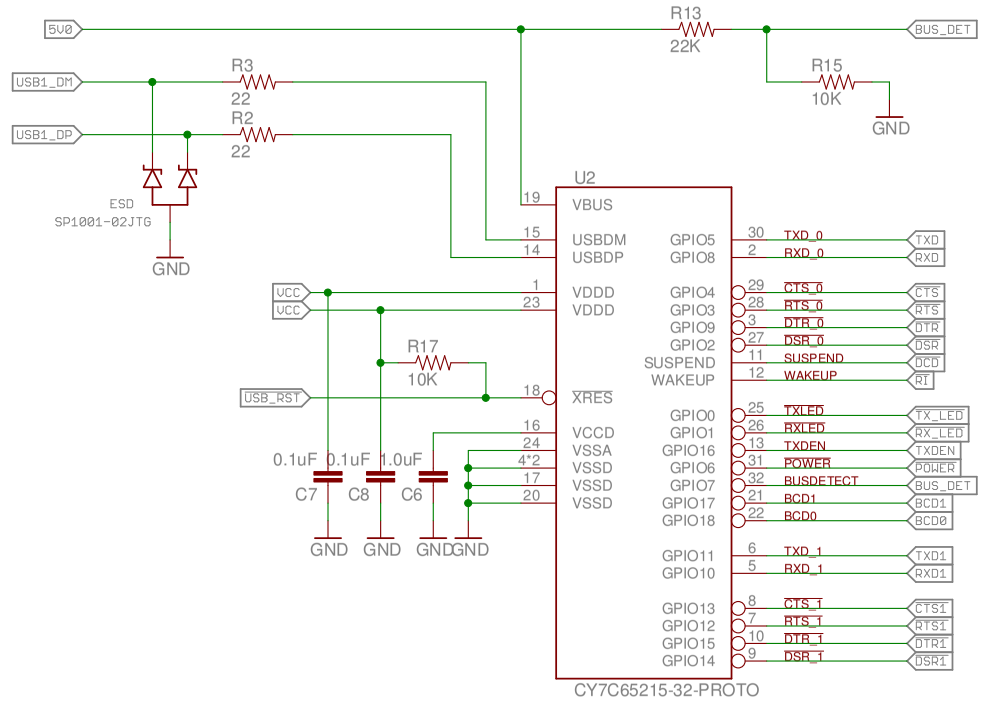

DUAL USB to UART Interface

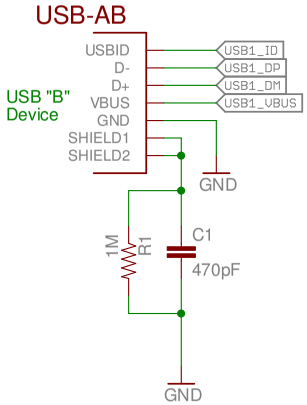

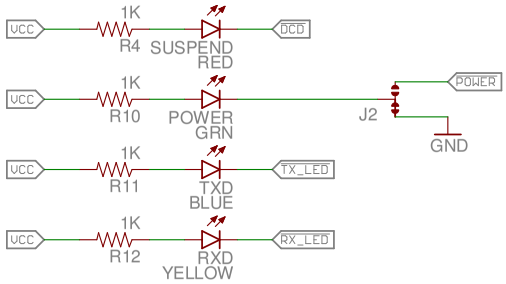

thingSoC thingSoC Reference Design
Open Source Sockets for IoT

TITLE: TSOC_USBUART2

Document Number:

REV:

Date: 4/9/16 11:32 AM

Sheet: 1/1

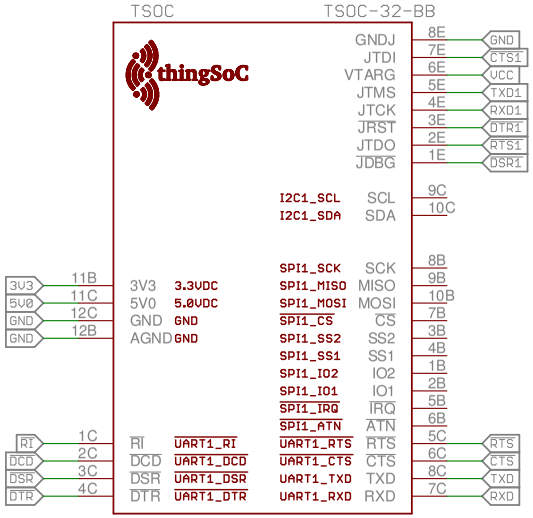

thingSoC Module Template

TSOC-PCB-EM-BB

thingSoC USBUART2 "Base" Reference Design

Page A : thingSoC IoT Socket
Page B : 3.3 Volt Power Supply
Page C : Dual USB to UART Bridge Device
Page D : USB-UART Output Connector

thingSoC

thingSoC Reference Design
Open Source Sockets for IoT

TITLE: TSOC_USBUART2

Document Number:

REV:

Date: 4/9/16 11:32 AM

Sheet: 1/1

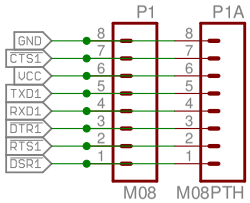

thingSoC

thingSoC Reference Design
Open Source Sockets for IoT

TITLE: TSOC_USBUART2

Document Number:

REV:

Date: 4/9/16 11:32 AM

Sheet: 1/1

3.3V LDO/Regulator

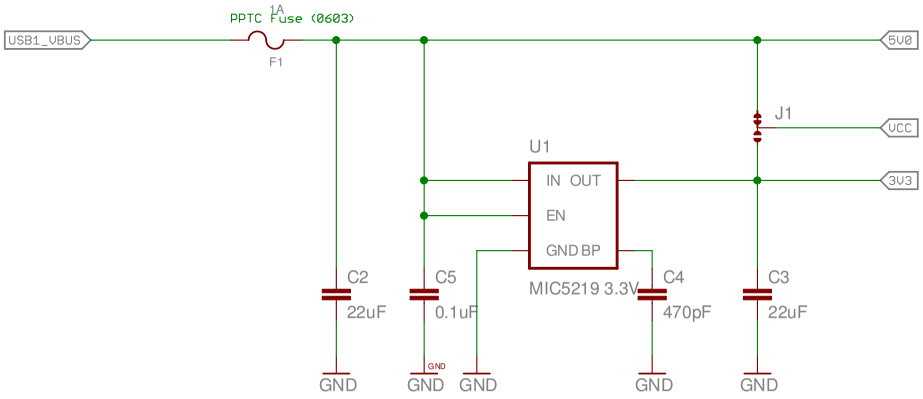

thingSoC

thingSoC Reference Design
Open Source Sockets for IoT

TITLE: TSOC_USBUART2

Document Number:

REV:

Date: 4/9/16 11:32 AM

Sheet: 1/1