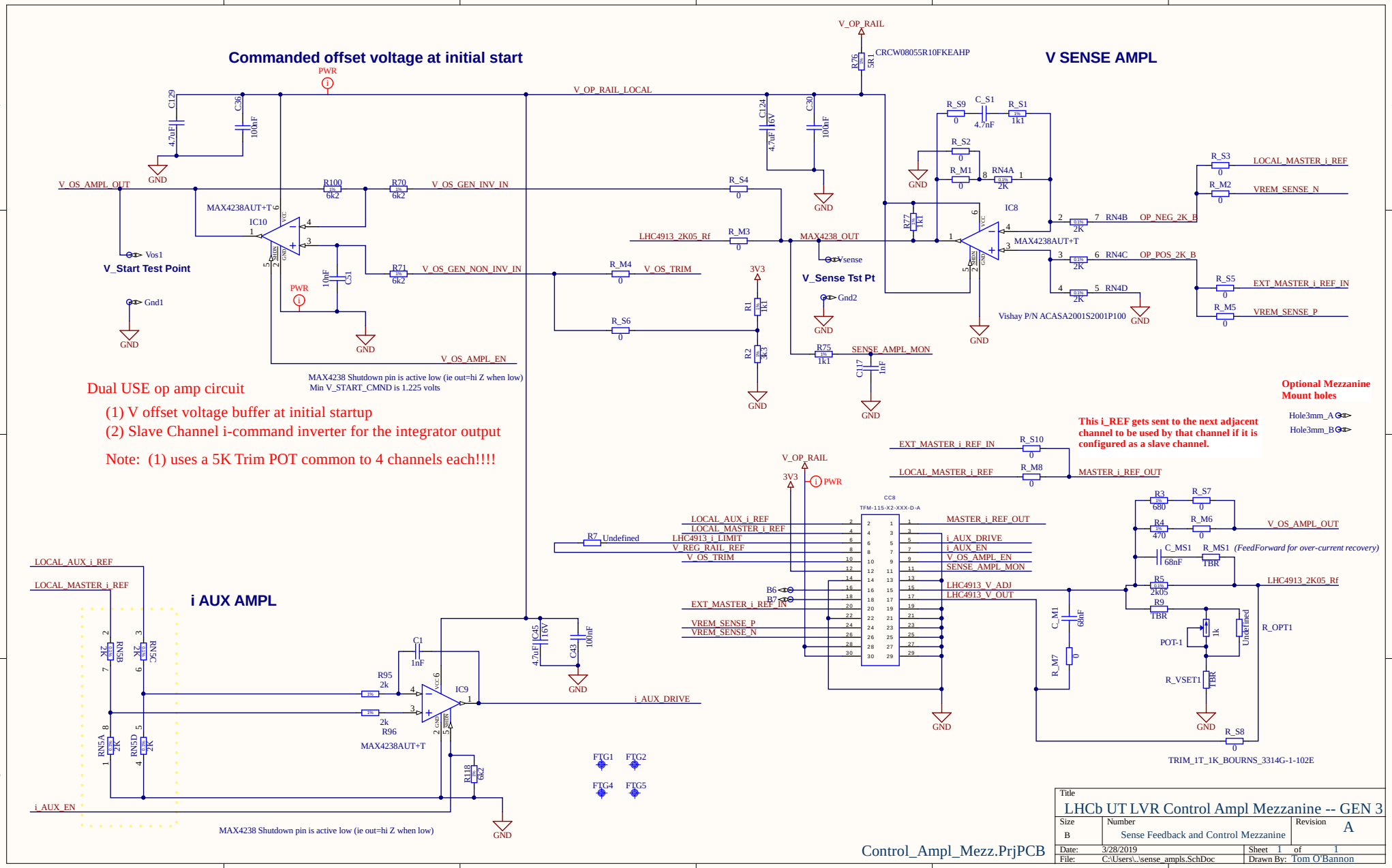
Commanded offset voltage at initial start
V SENSE AMPL
i AUX AMPL
V_OP_RAIL
CRCW08055R10FKEAHP
V_OP_RAIL_LOCAL
V_OS_AMPL_OUT
V_OS_GEN_INV_IN
V_OS_GEN_NON_INV_IN
V_OS_AMPL_EN
MAX4238AUT+T
IC10
V_Start Test Point
Vos1
Gnd1
MAX4238 Shutdown pin is active low (ie out=hi Z when low)
Min V_START_CMND is 1.225 volts
Dual USE op amp circuit
(1) V offset voltage buffer at initial startup
(2) Slave Channel i-command inverter for the integrator output
Note: (1) uses a 5K Trim POT common to 4 channels each!!!!
LHC4913_2K05_Rf
MAX4238_OUT
V_OS_TRIM
3V3
V_Sense Tst Pt
Vsense
Gnd2
SENSE_AMPL_MON
IC8
Vishay P/N ACASA2001S2001P100
RN4B
RN4C
RN4D
OP_NEG_2K_B
OP_POS_2K_B
LOCAL_MASTER_i_REF
VREM_SENSE_N
EXT_MASTER_i_REF_IN
VREM_SENSE_P
This i_REF gets sent to the next adjacent channel to be used by that channel if it is configured as a slave channel.
Optional Mezzanine Mount holes
Hole3mm_A
Hole3mm_B
EXT_MASTER_i_REF_IN
LOCAL_MASTER_i_REF
MASTER_i_REF_OUT
CC8
TFM-115-X2-XXX-D-A
LOCAL_AUX_i_REF
LOCAL_MASTER_i_REF
LHC4913_i_LIMIT
V_REG_RAIL_REF
V_OS_TRIM
i_AUX_DRIVE
i_AUX_EN
V_OS_AMPL_EN
SENSE_AMPL_MON
LHC4913_V_ADJ
LHC4913_V_OUT
VREM_SENSE_P
VREM_SENSE_N
R7 Undefined
V_OS_AMPL_OUT
(FeedForward for over-current recovery)
LHC4913_2K05_Rf
R_OPT1
POT-1
R_VSET1
TRIM_1T_1K_BOURNS_3314G-1-102E
i_AUX_DRIVE
i_AUX_EN
MAX4238 Shutdown pin is active low (ie out=hi Z when low)
Control_Ampl_Mezz.PrjPCB
Title
LHCb UT LVR Control Ampl Mezzanine -- GEN 3
Size
B
Number
Sense Feedback and Control Mezzanine
Revision
A
Date: 3/28/2019
Sheet 1 of 1
File: C:\Users\..\sense_ampls.SchDoc
Drawn By: Tom O'Bannon