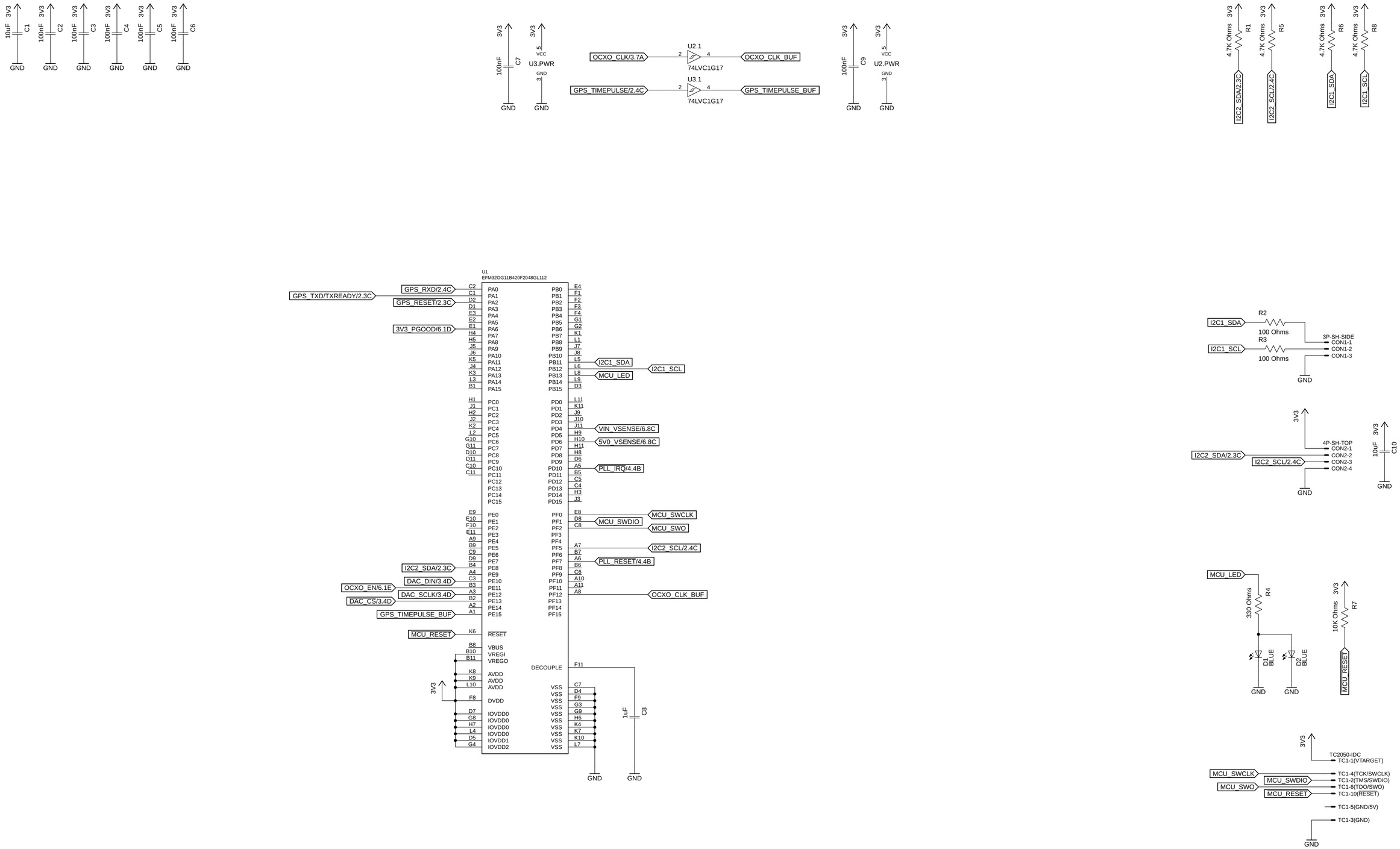

qo-100-gpsdo	João Silva Logo
Joao Silva	
Sheet: 1/6	MCU
Date: 13/12/21 21:48	Rev: 1

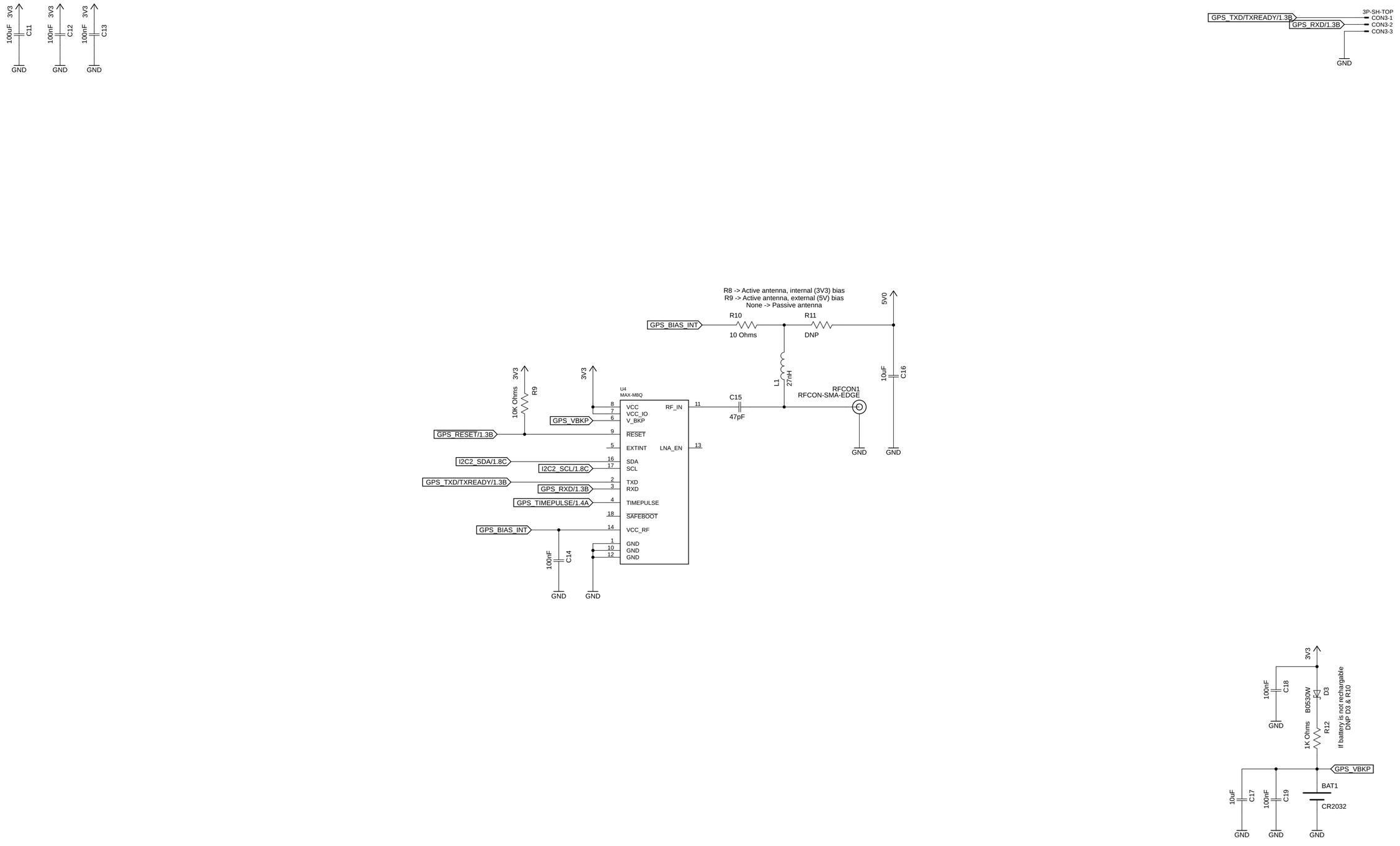

qo-100-gpsdo	
Joao Silva	
Sheet: 2/6	GPS Receiver
Date: 13/12/21 21:48	Rev: 1

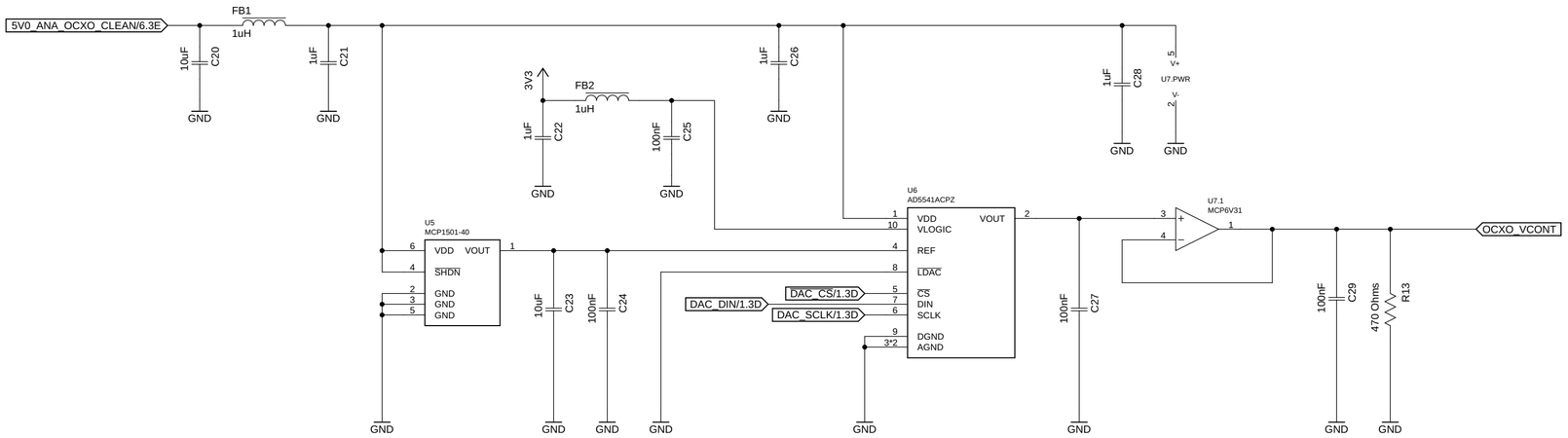

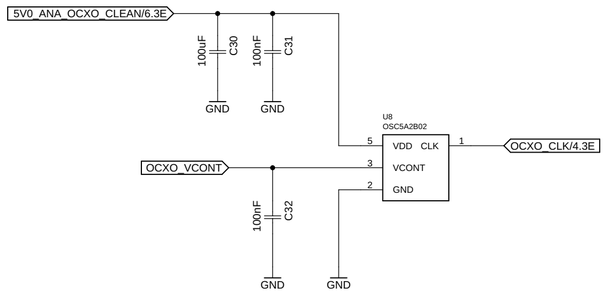

qo-100-gpsdo	
Joao Silva	
Sheet: 3/6	OCXO
Date: 13/12/21 21:48	Rev: 1

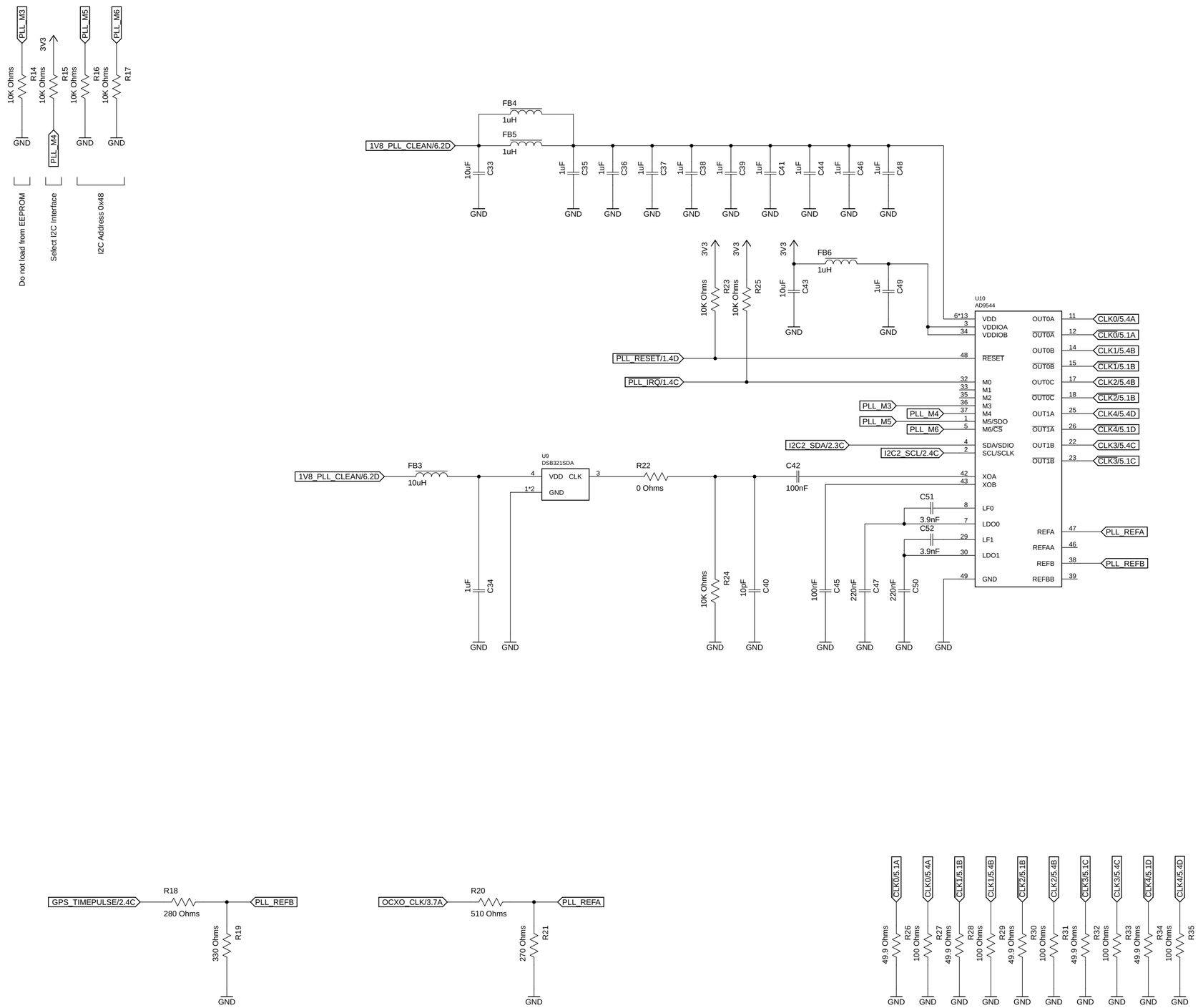

qo-100-gpsdo	
Joao Silva	
Sheet: 4/6	PLL
Date: 13/12/21 21:48	Rev: 1

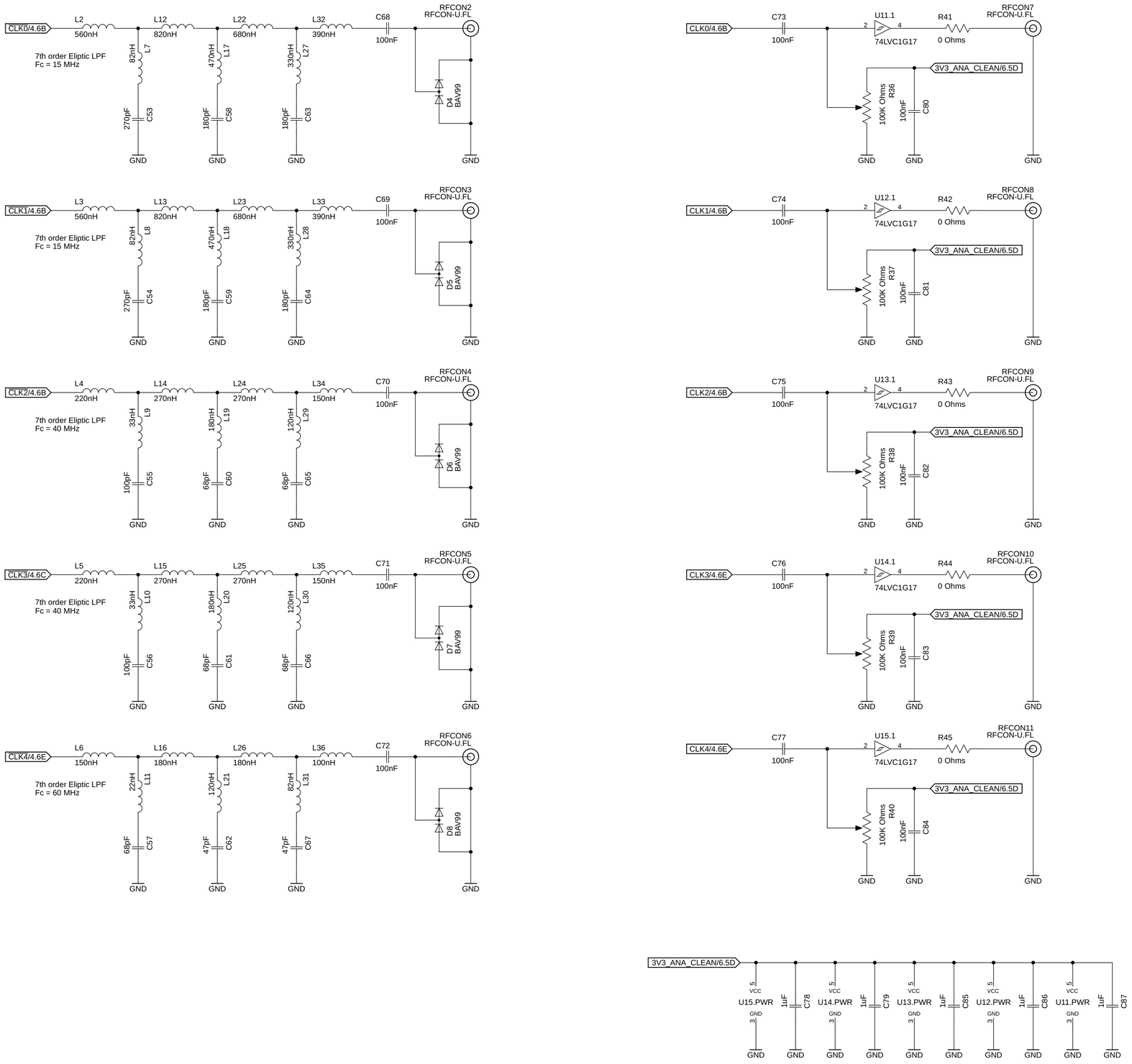

qo-100-gpsdo	
Joao Silva	
Sheet: 5/6	Output stages
Date: 13/12/21 21:48	Rev: 1

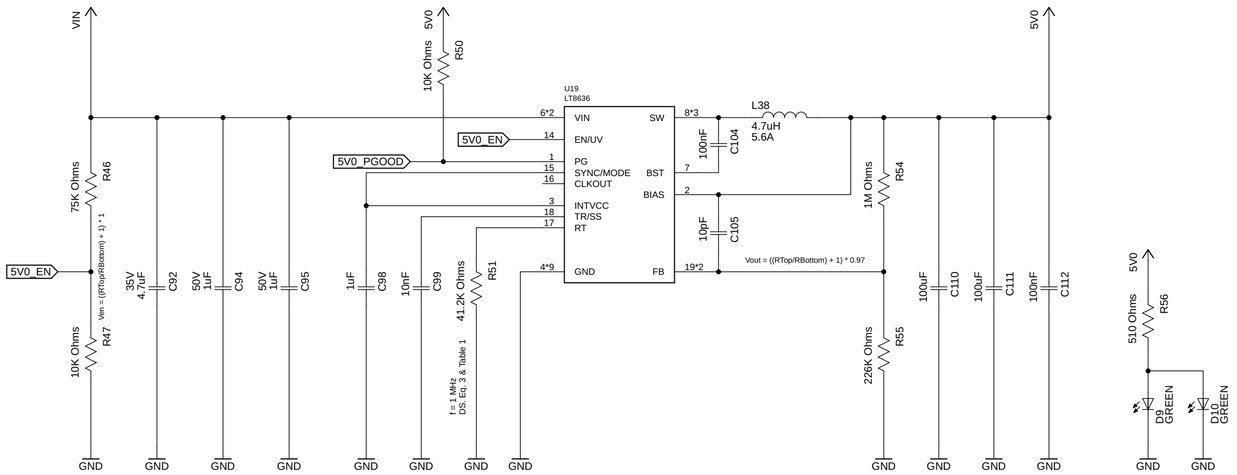

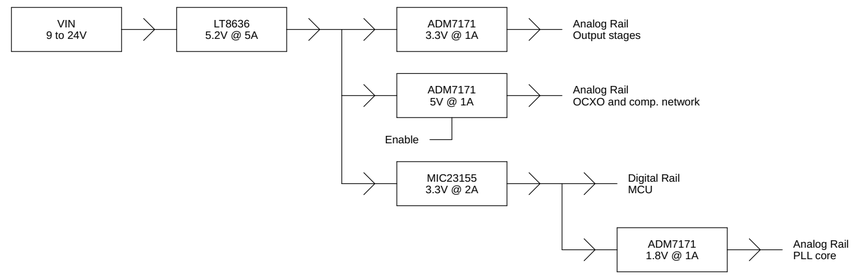

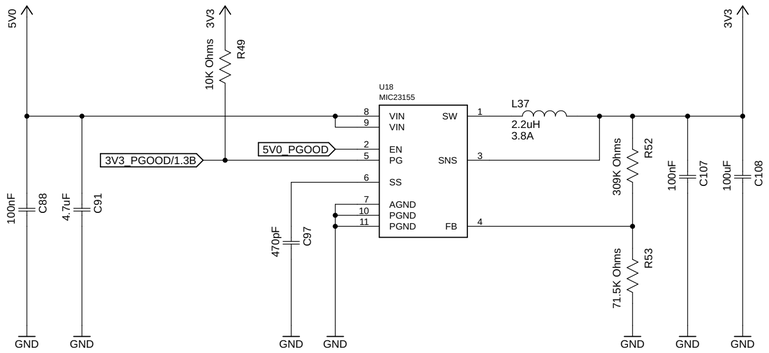

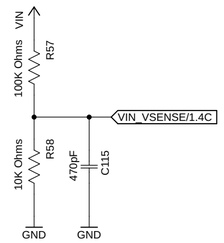

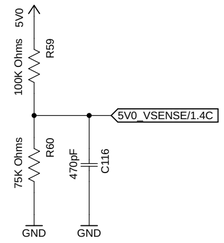

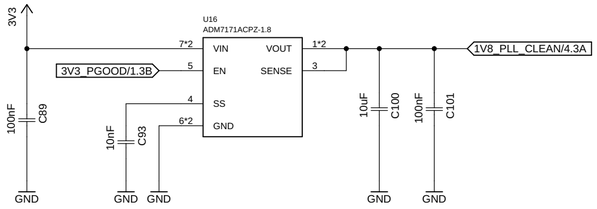

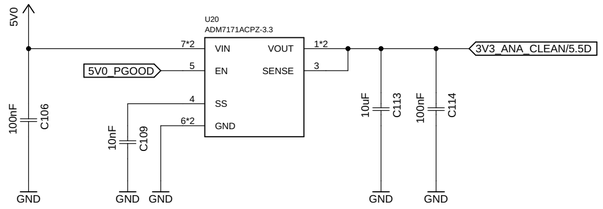

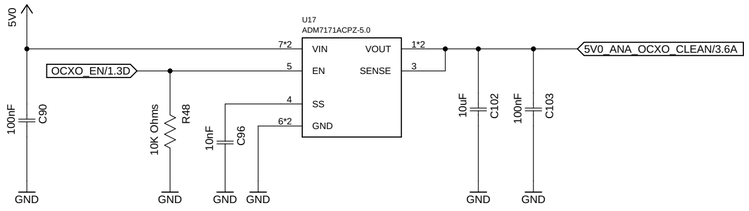

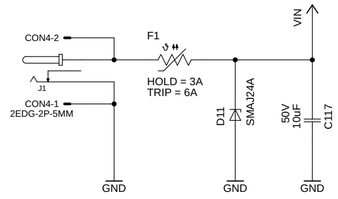

qo-100-gpsdo	
Joao Silva	
Sheet: 6/6	Power
Date: 13/12/21 21:48	Rev: 1