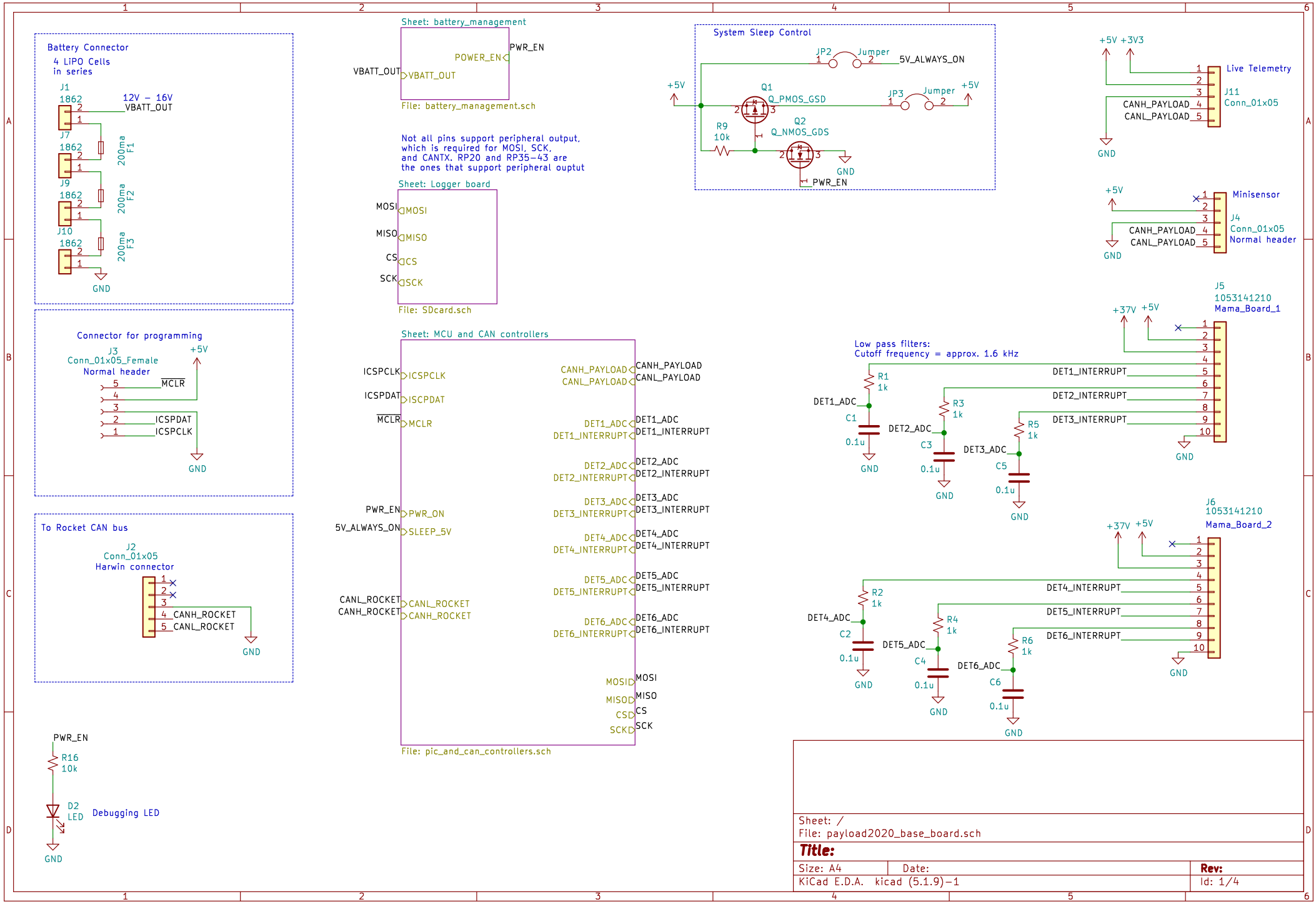
Battery Connector
4 LiPO Cells
in series
J1
1862
12V – 16V
VBATT_OUT
J7
1862
200ma
F1
J9
1862
200ma
F2
J10
1862
200ma
F3
GND
Sheet: battery_management
VBATT_OUT
POWER_EN
PWR_EN
File: battery_management.sch
Not all pins support peripheral output,
which is required for MOSI, SCK,
and CANTX. RP20 and RP35–43 are
the ones that support peripheral ouptut
Sheet: Logger board
MOSI
MISO
CS
SCK
File: SDcard.sch
System Sleep Control
JP2
Jumper
5V_ALWAYS_ON
+5V
Q1
Q_PMOS_GSD
JP3
Jumper
R9
10k
Q2
Q_NMOS_GDS
GND
PWR_EN
+5V +3V3
Live Telemetry
J11
Conn_01x05
CANH_PAYLOAD
CANL_PAYLOAD
GND
+5V
Minisensor
J4
Conn_01x05
Normal header
CANH_PAYLOAD
CANL_PAYLOAD
GND
Connector for programming
J3
Conn_01x05_Female
Normal header
+5V
MCLR
ICSPDAT
ICSPCLK
GND
Sheet: MCU and CAN controllers
ICSPCLK
ICSPDAT
MCLR
PWR_EN
5V_ALWAYS_ON
PWR_ON
SLEEP_5V
CANL_ROCKET
CANH_ROCKET
CANH_PAYLOAD
CANL_PAYLOAD
DET1_ADC
DET1_INTERRUPT
DET2_ADC
DET2_INTERRUPT
DET3_ADC
DET3_INTERRUPT
DET4_ADC
DET4_INTERRUPT
DET5_ADC
DET5_INTERRUPT
DET6_ADC
DET6_INTERRUPT
MOSI
MISO
CS
SCK
File: pic_and_can_controllers.sch
To Rocket CAN bus
J2
Conn_01x05
Harwin connector
CANH_ROCKET
CANL_ROCKET
GND
PWR_EN
R16
10k
D2
LED
Debugging LED
GND
J5
1053141210
Mama_Board_1
+37V +5V
Low pass filters:
Cutoff frequency = approx. 1.6 kHz
R1
1k
DET1_ADC
C1
0.1u
DET1_INTERRUPT
R3
1k
DET2_ADC
C3
0.1u
DET2_INTERRUPT
R5
1k
DET3_ADC
C5
0.1u
DET3_INTERRUPT
GND
J6
1053141210
Mama_Board_2
+37V +5V
R2
1k
DET4_ADC
C2
0.1u
DET4_INTERRUPT
R4
1k
DET5_ADC
C4
0.1u
DET5_INTERRUPT
R6
1k
DET6_ADC
C6
0.1u
DET6_INTERRUPT
GND
Sheet: /
File: payload2020_base_board.sch
Title:
Size: A4
Date:
Rev:
KiCad E.D.A. kicad (5.1.9)-1
Id: 1/4

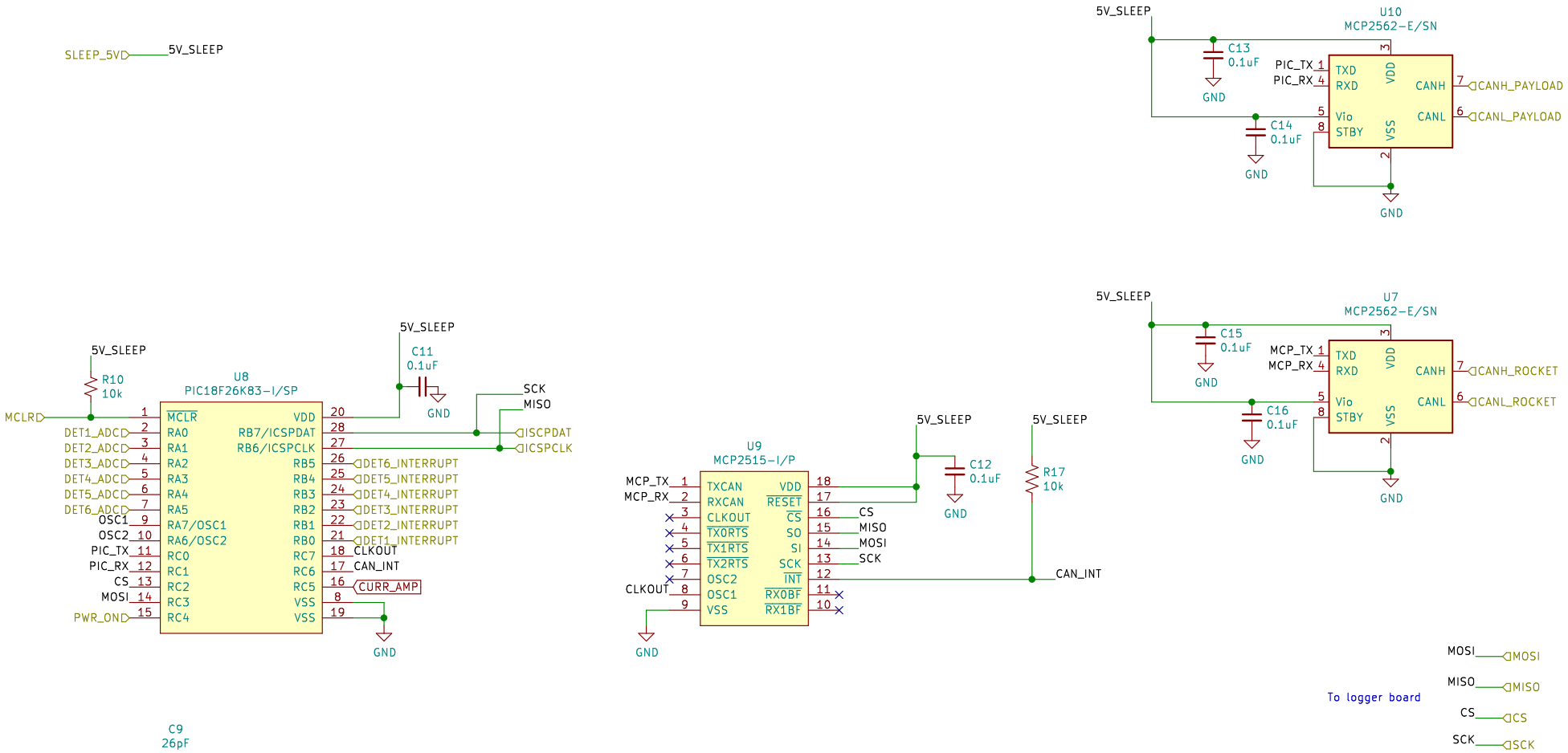

Sheet: /MCU and CAN controllers/
File: pic_and_can_controllers.sch

Title:

Size: A4	Date:	Rev:
KiCad E.D.A. kicad (5.1.9)-1		Id: 2/4

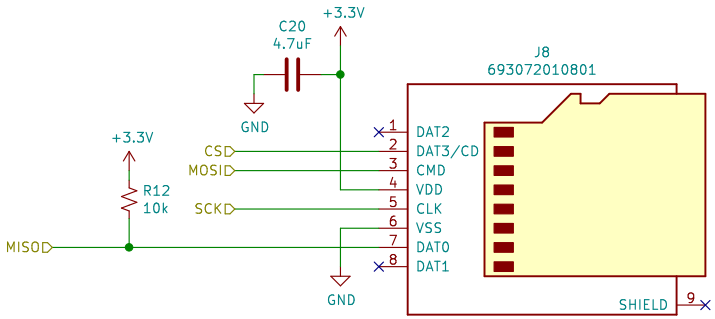

Sheet: /Logger board/
File: SDcard.sch

Title:

Size: A4	Date:	**Rev:**
KiCad E.D.A. kicad (5.1.9)-1		Id: 3/4

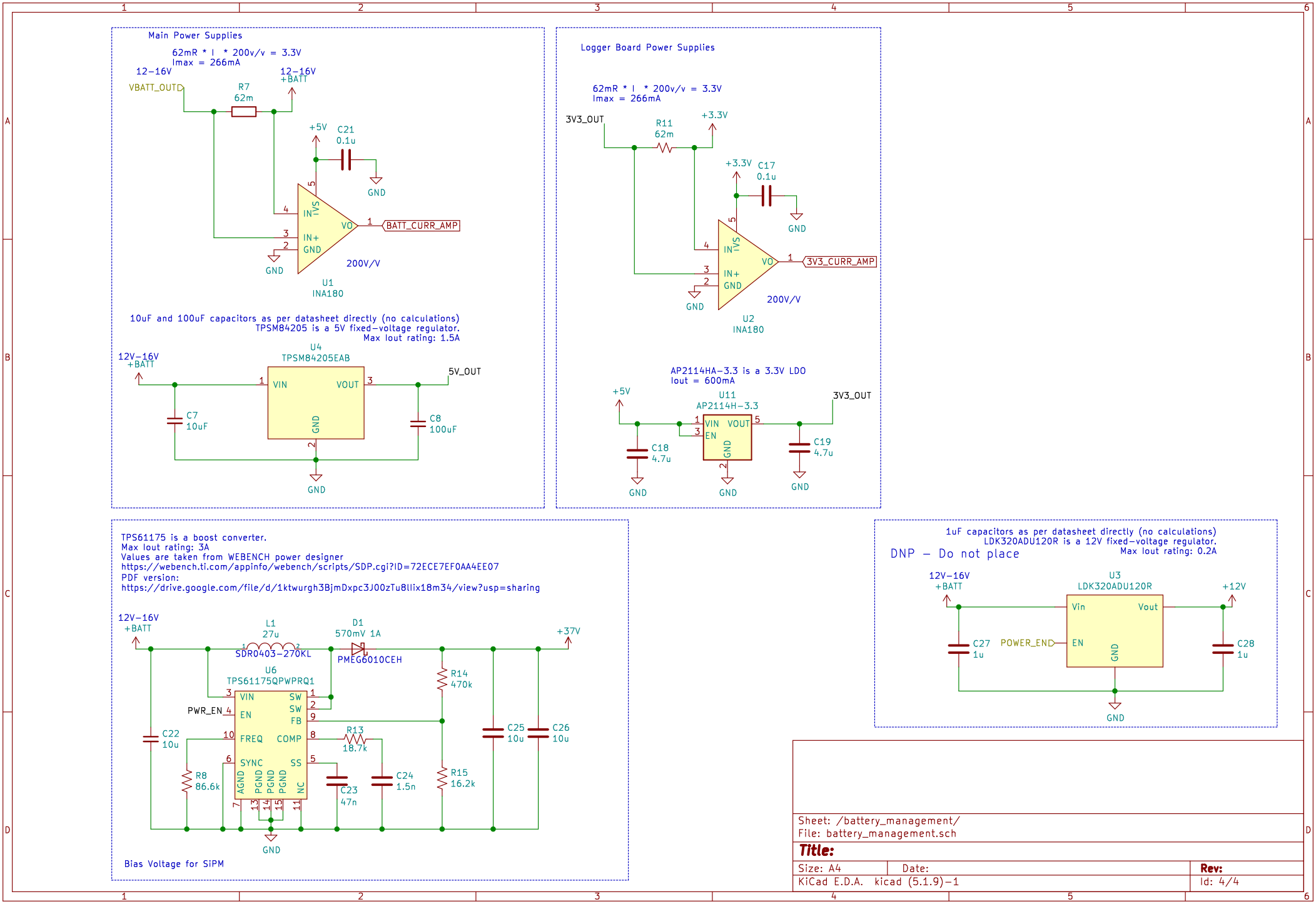
Main Power Supplies
62mR * I * 200v/v = 3.3V
Imax = 266mA
12-16V
VBATT_OUT
R7
62m
12-16V
+BATT
+5V
C21
0.1u
GND
IN-
IVS
IN+
GND
VO
BATT_CURR_AMP
200V/V
U1
INA180
10uF and 100uF capacitors as per datasheet directly (no calculations)
TPSM84205 is a 5V fixed-voltage regulator.
Max Iout rating: 1.5A
U4
TPSM84205EAB
12V-16V
+BATT
VIN
VOUT
GND
5V_OUT
C7
10uF
C8
100uF
Logger Board Power Supplies
62mR * I * 200v/v = 3.3V
Imax = 266mA
3V3_OUT
R11
62m
+3.3V
C17
0.1u
3V3_CURR_AMP
U2
INA180
AP2114HA-3.3 is a 3.3V LDO
Iout = 600mA
U11
AP2114H-3.3
VIN
VOUT
EN
C18
4.7u
C19
4.7u
TPS61175 is a boost converter.
Max Iout rating: 3A
Values are taken from WEBENCH power designer
https://webench.ti.com/appinfo/webench/scripts/SDP.cgi?ID=72ECE7EF0AA4EE07
PDF version:
https://drive.google.com/file/d/1ktwurgh3BjmDxpc3J00zTu8llix18m34/view?usp=sharing
L1
27u
SDR0403-270KL
D1
570mV 1A
PMEG6010CEH
+37V
U6
TPS61175QPWPRQ1
PWR_EN
SW
FB
FREQ
COMP
SYNC
SS
AGND
PGND
NC
R14
470k
R13
18.7k
C22
10u
R8
86.6k
C23
47n
C24
1.5n
R15
16.2k
C25
10u
C26
10u
Bias Voltage for SiPM
1uF capacitors as per datasheet directly (no calculations)
LDK320ADU120R is a 12V fixed-voltage regulator.
Max Iout rating: 0.2A
DNP - Do not place
U3
LDK320ADU120R
Vin
Vout
POWER_EN
C27
1u
C28
1u
+12V
Sheet: /battery_management/
File: battery_management.sch
Title:
Size: A4
Date:
Rev:
KiCad E.D.A. kicad (5.1.9)-1
Id: 4/4