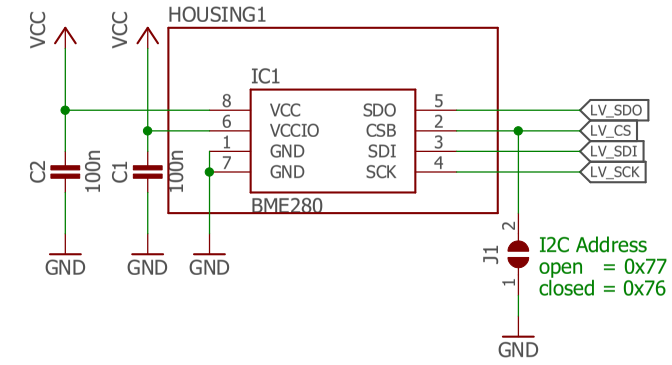


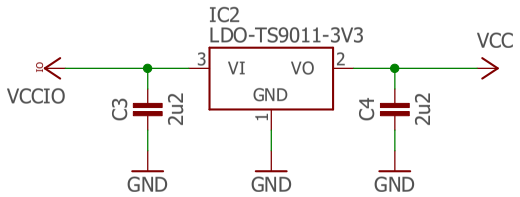


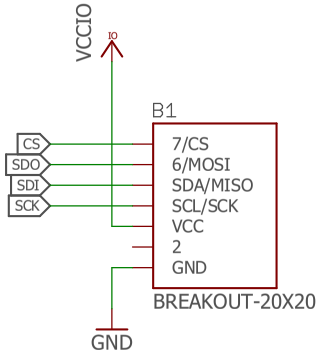


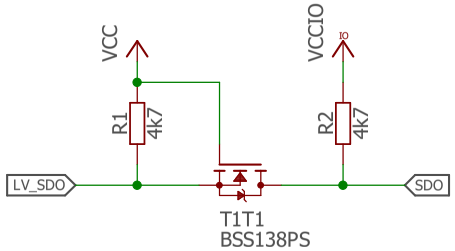


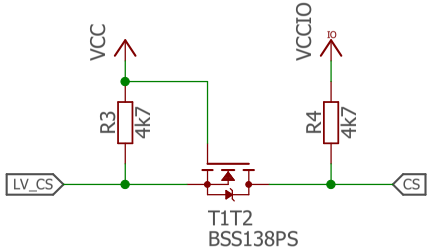


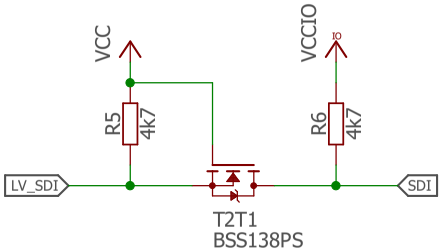


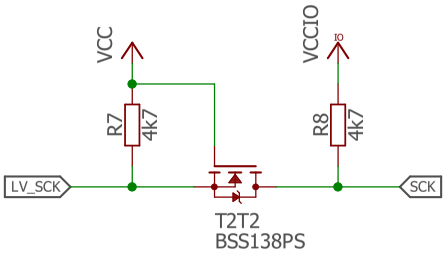


Released under the Creative Commons Attribution Share-Alike License. http://creativecommons.org/licenses/by-sa/4.0/

Designed by Stephan Watterott (Watterott electronic)

OSHW

Watterott

www.watterott.com

BME280-Breakout_v11

01.09.2017 14:14

Sheet: 1/1

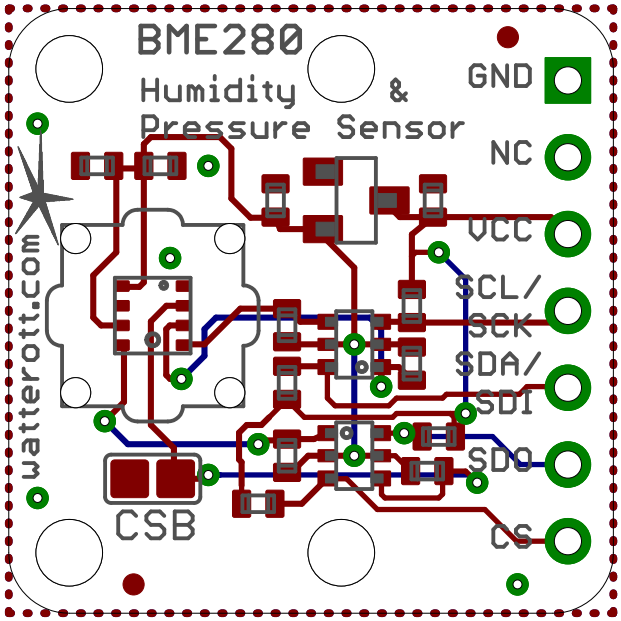
BME280
Humidity & Pressure Sensor
GND
NC
VCC
SCL/SCK
SDA/SDI
SDO
CS
CSB
watterott.com