HB-UNI-Sens-X

(c) Dipl.-Ing. Wolfram Winter
CC BY-NC-SA 4.0

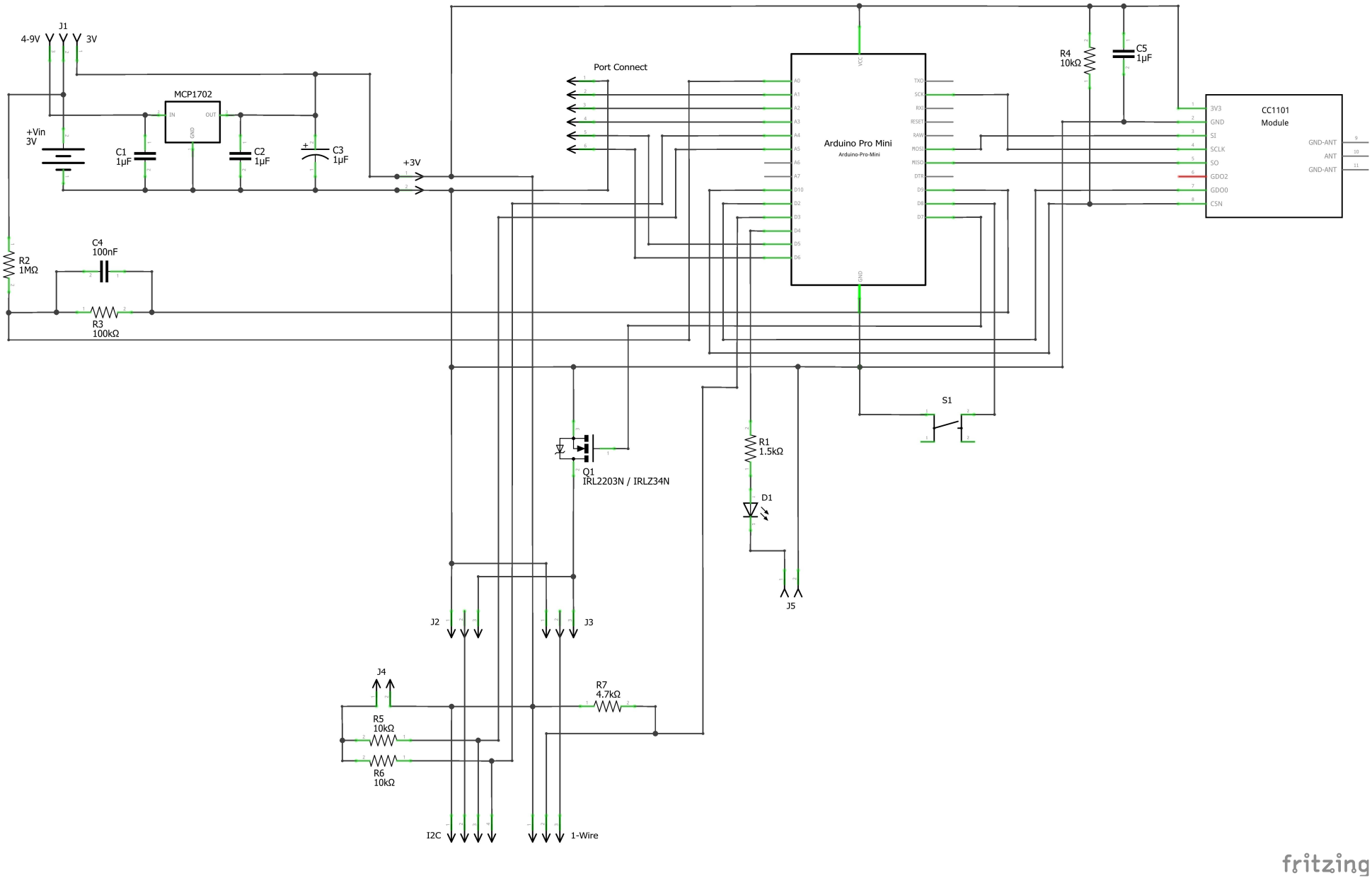

fritzing