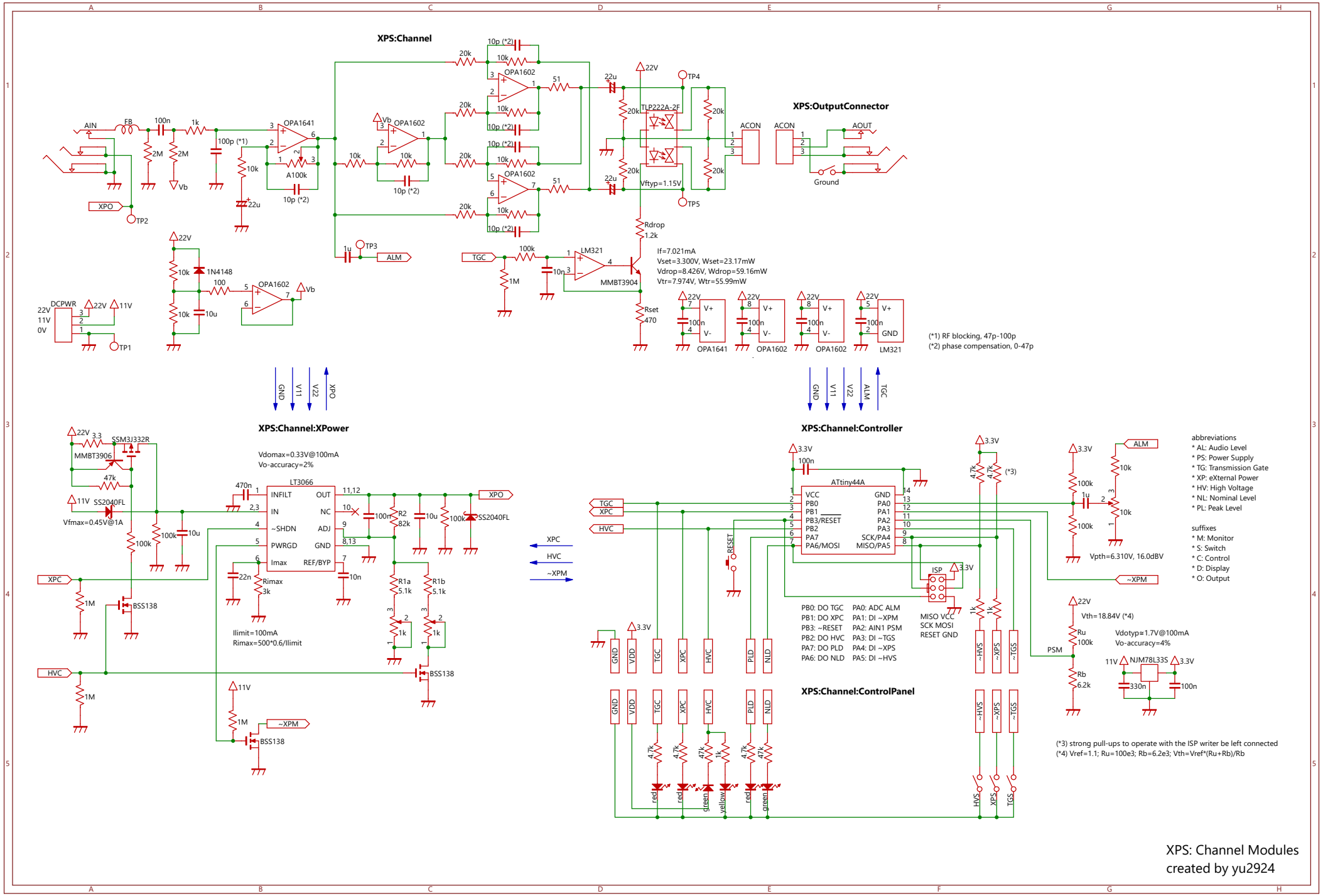
XPS:Channel
XPS:OutputConnector
XPS:Channel:XPower
XPS:Channel:Controller
XPS:Channel:ControlPanel
If=7.021mA
Vset=3.300V, Wset=23.17mW
Vdrop=8.426V, Wdrop=59.16mW
Vtr=7.974V, Wtr=55.99mW
(*1) RF blocking, 47p-100p
(*2) phase compensation, 0-47p
Vdomax=0.33V@100mA
Vo-accuracy=2%
Vfmax=0.45V@1A
Ilimit=100mA
Rimax=500*0.6/Ilimit
Vpth=6.310V, 16.0dBV
Vth=18.84V (*4)
Vdotyp≈1.7V@100mA
Vo-accuracy=4%
PB0: DO TGC
PB1: DO XPC
PB3: ~RESET
PB2: DO HVC
PA7: DO PLD
PA6: DO NLD
PA0: ADC ALM
PA1: DI ~XPM
PA2: AIN1 PSM
PA3: DI ~TGS
PA4: DI ~XPS
PA5: DI ~HVS
MISO VCC
SCK MOSI
RESET GND
abbreviations
* AL: Audio Level
* PS: Power Supply
* TG: Transmission Gate
* XP: eXternal Power
* HV: High Voltage
* NL: Nominal Level
* PL: Peak Level
suffixes
* M: Monitor
* S: Switch
* C: Control
* D: Display
* O: Output
(*3) strong pull-ups to operate with the ISP writer be left connected
(*4) Vref=1.1; Ru=100e3; Rb=6.2e3; Vth=Vref*(Ru+Rb)/Rb
XPS: Channel Modules
created by yu2924

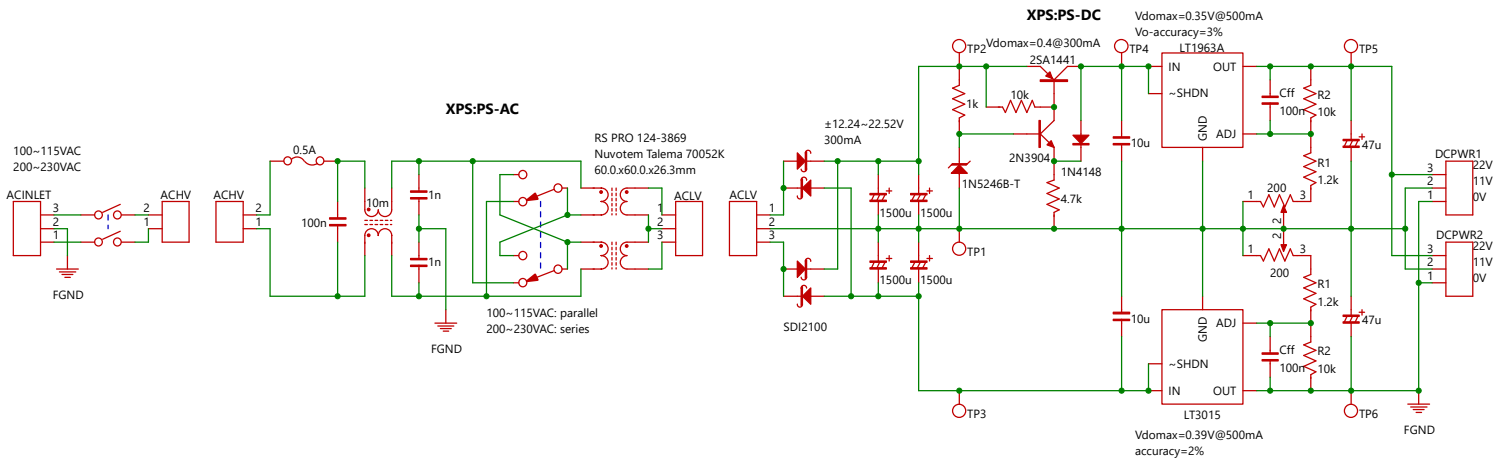

XPS: Power Supply Modules
created by yu2924