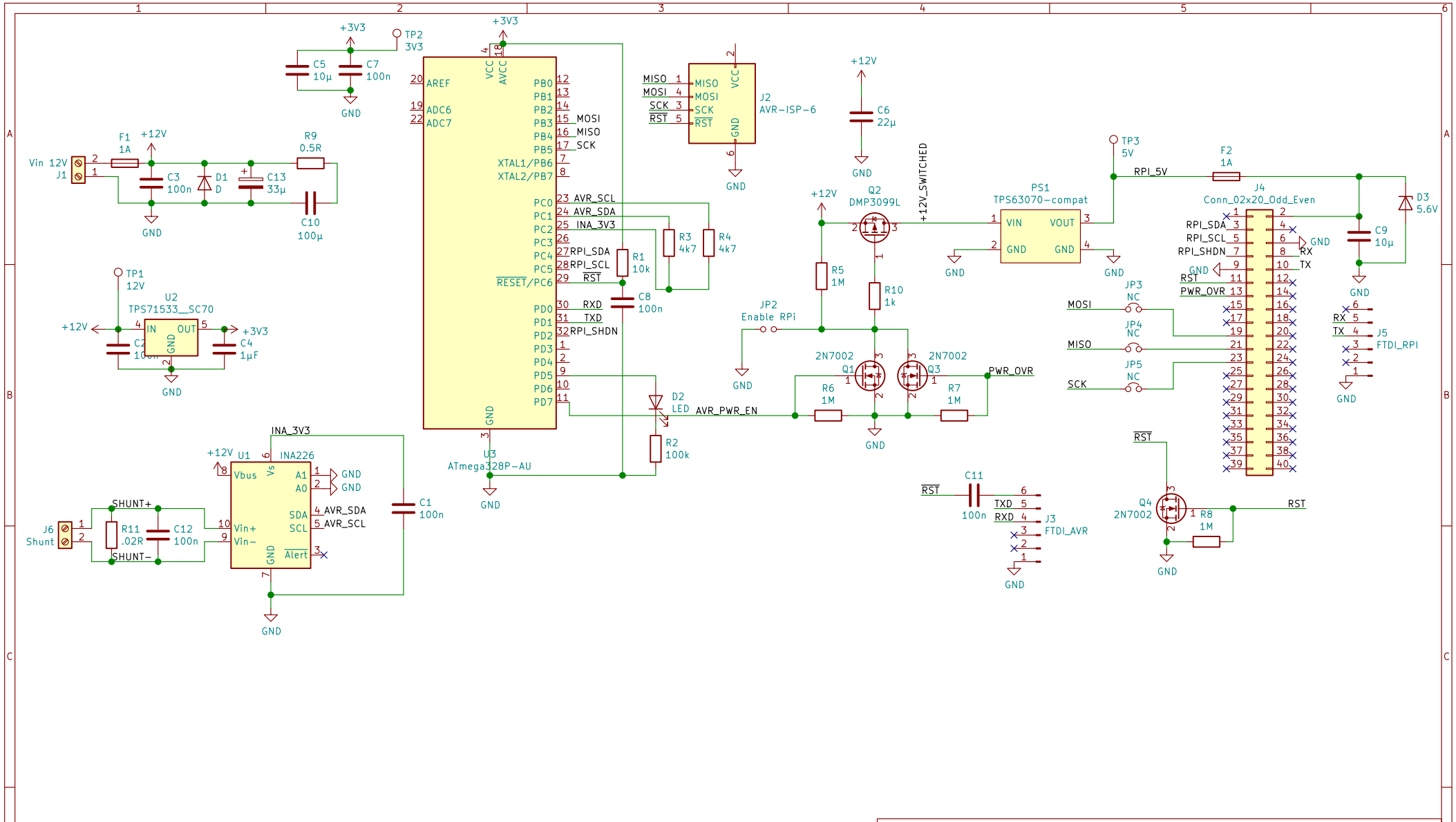

https://tbspace.de

Tobias Mädel (@manawyrm), Tobias Schramm (@Toble_Miner)

Sheet: /

File: solarcampi.sch

Title: Solar Camera Pi

Size: A4	Date: 2019-07-27	**Rev: C**
KiCad E.D.A. kicad 5.1.2		Id: 1/1