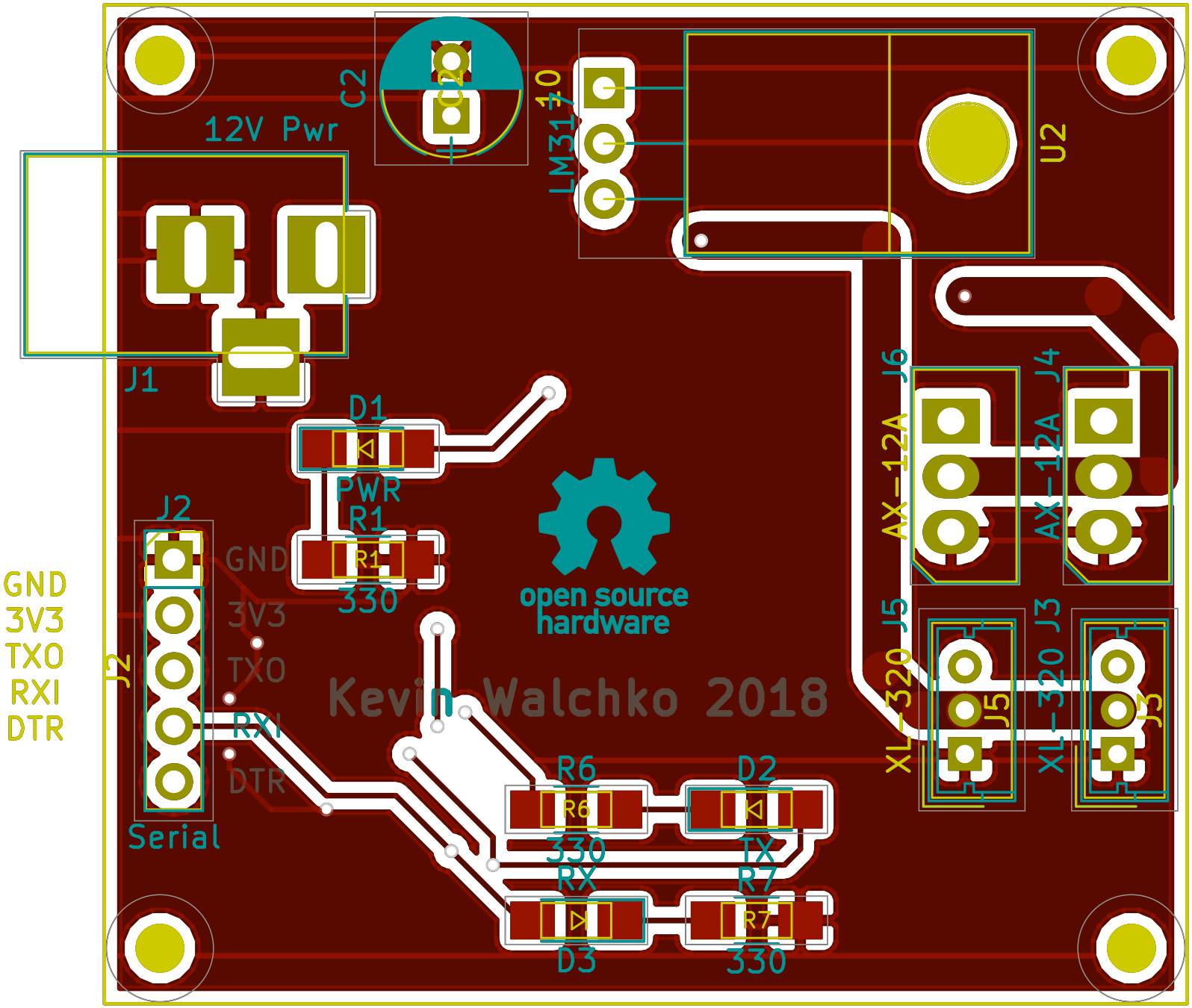
12V Pwr
C2
LM317
U2
J1
D1
PWR
R1
330
J2
GND
3V3
TXO
RXI
DTR
Serial
open source
hardware
Kevin Walchko 2018
R6
330
D2
TX
RX
R7
D3
330
J6
AX-12A
J4
AX-12A
J5
XL-320
J3
XL-320

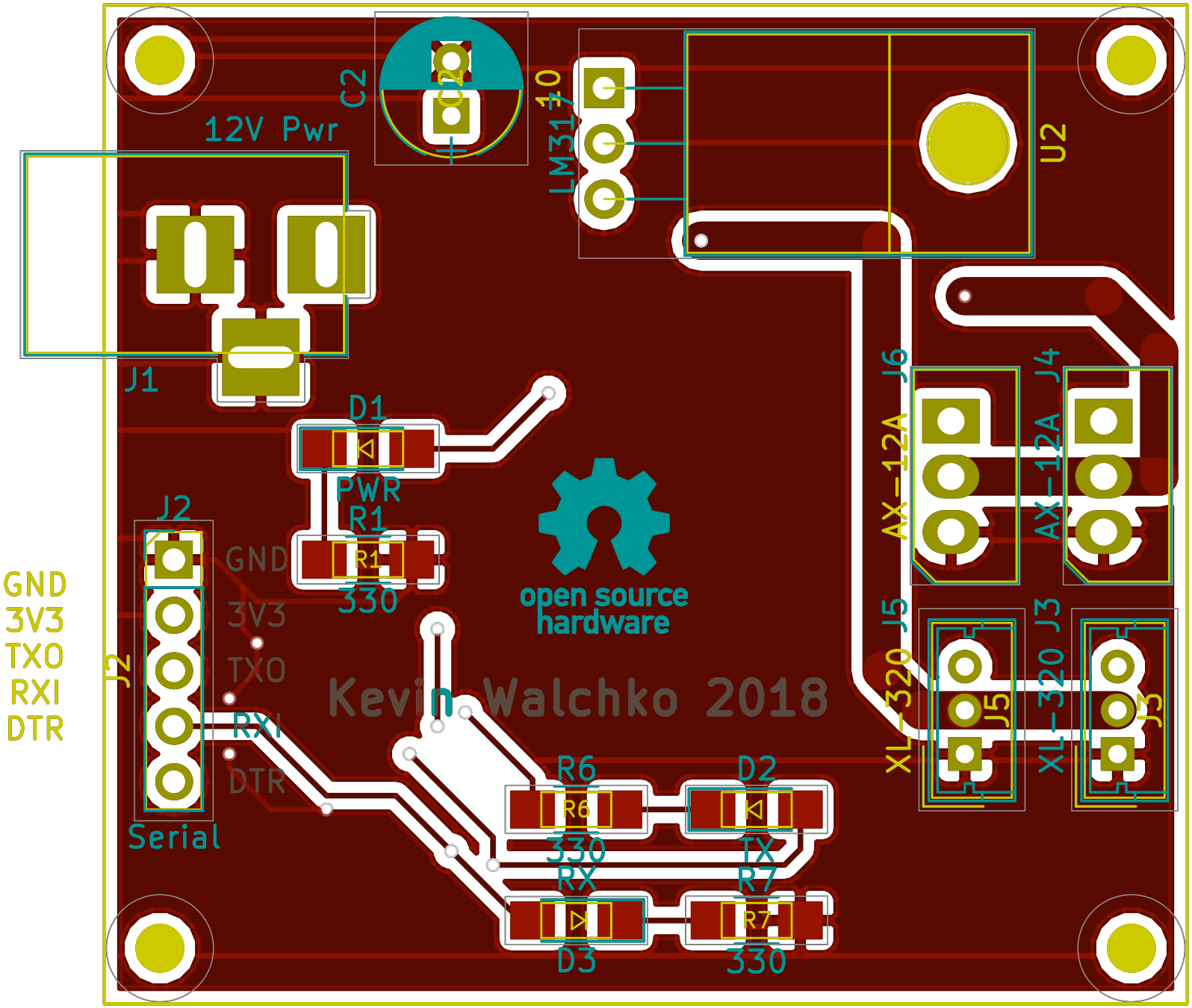
12V Pwr
C2
LM317
U2
J1
D1
PWR
R1
330
J2
GND
3V3
TXO
RXI
DTR
Serial
open source
hardware
Kevin Walchko 2018
R6
330
D2
TX
RX
R7
D3
330
J6
AX-12A
J4
AX-12A
J5
XL-320
J3
XL-320

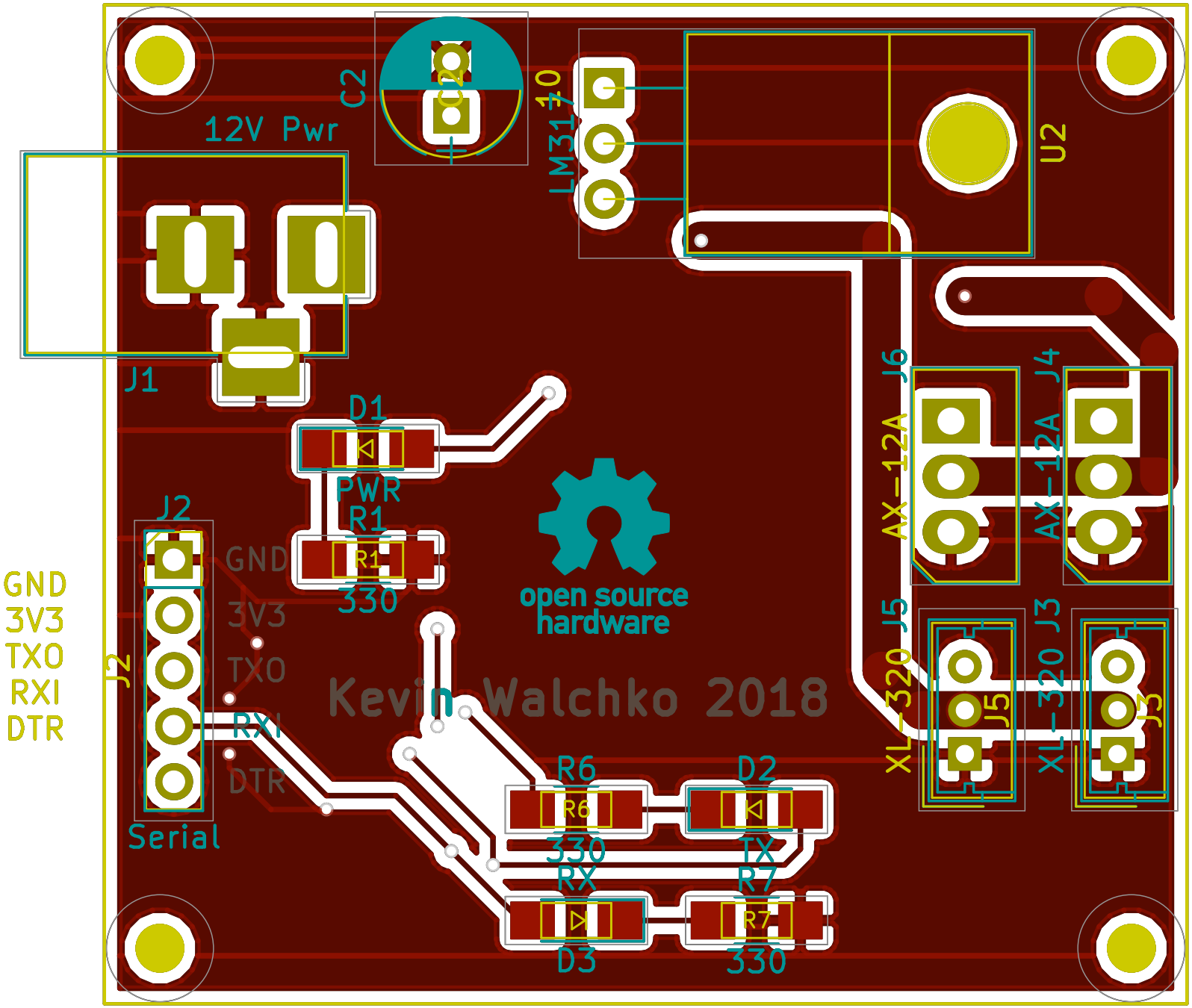
12V Pwr
C2
LM317
U2
J1
D1
PWR
R1
330
J2
GND
3V3
TXO
RXI
DTR
Serial
open source
hardware
Kevin Walchko 2018
R6
330
D2
TX
RX
R7
D3
330
J6
AX-12A
J4
AX-12A
J5
XL-320
J3
XL-320

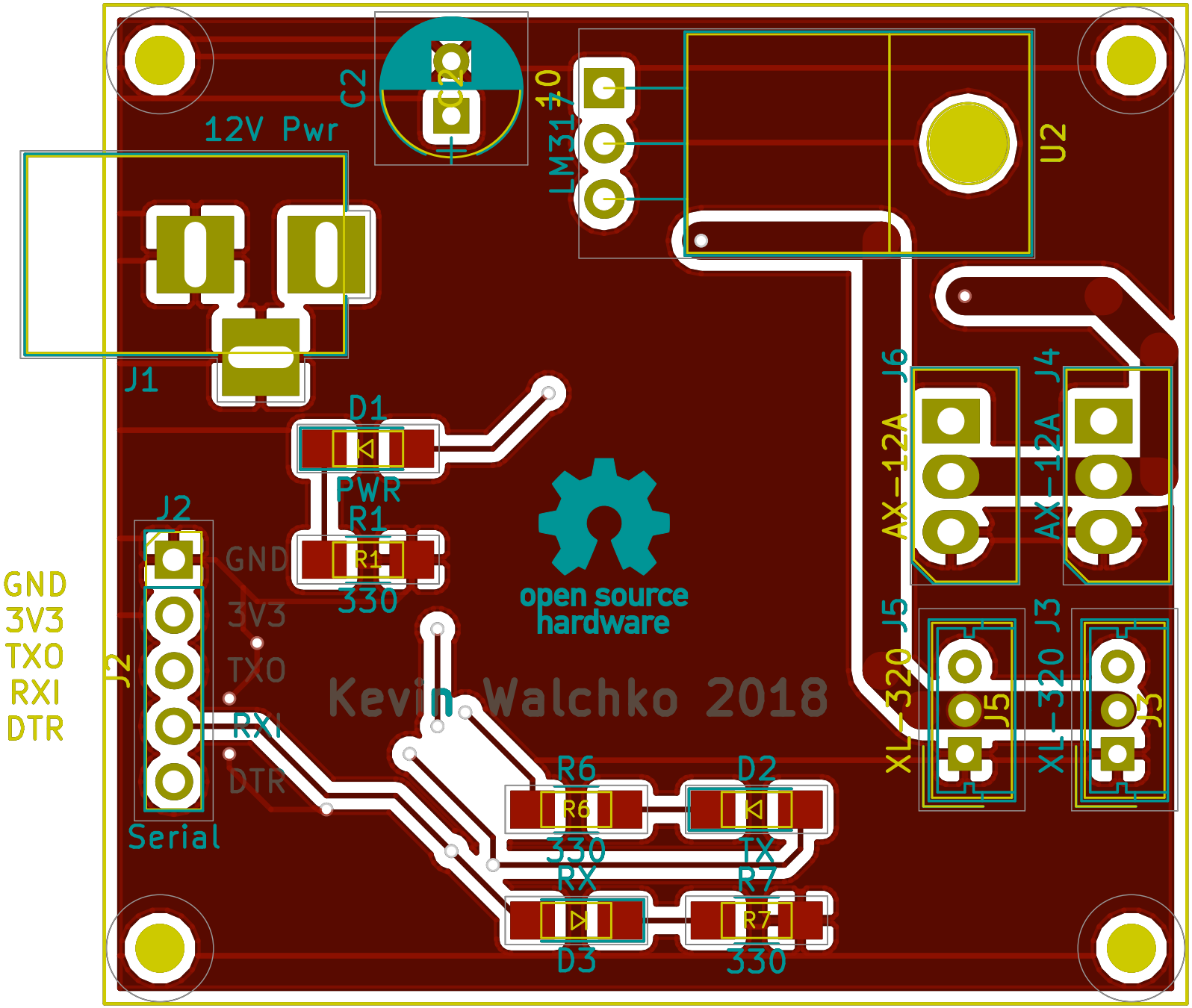
12V Pwr
C2
LM317
U2
J1
D1
PWR
R1
330
J2
GND
3V3
TXO
RXI
DTR
Serial
open source
hardware
Kevin Walchko 2018
R6
330
D2
TX
RX
R7
D3
330
J6
AX-12A
J4
AX-12A
J5
XL-320
J3
XL-320

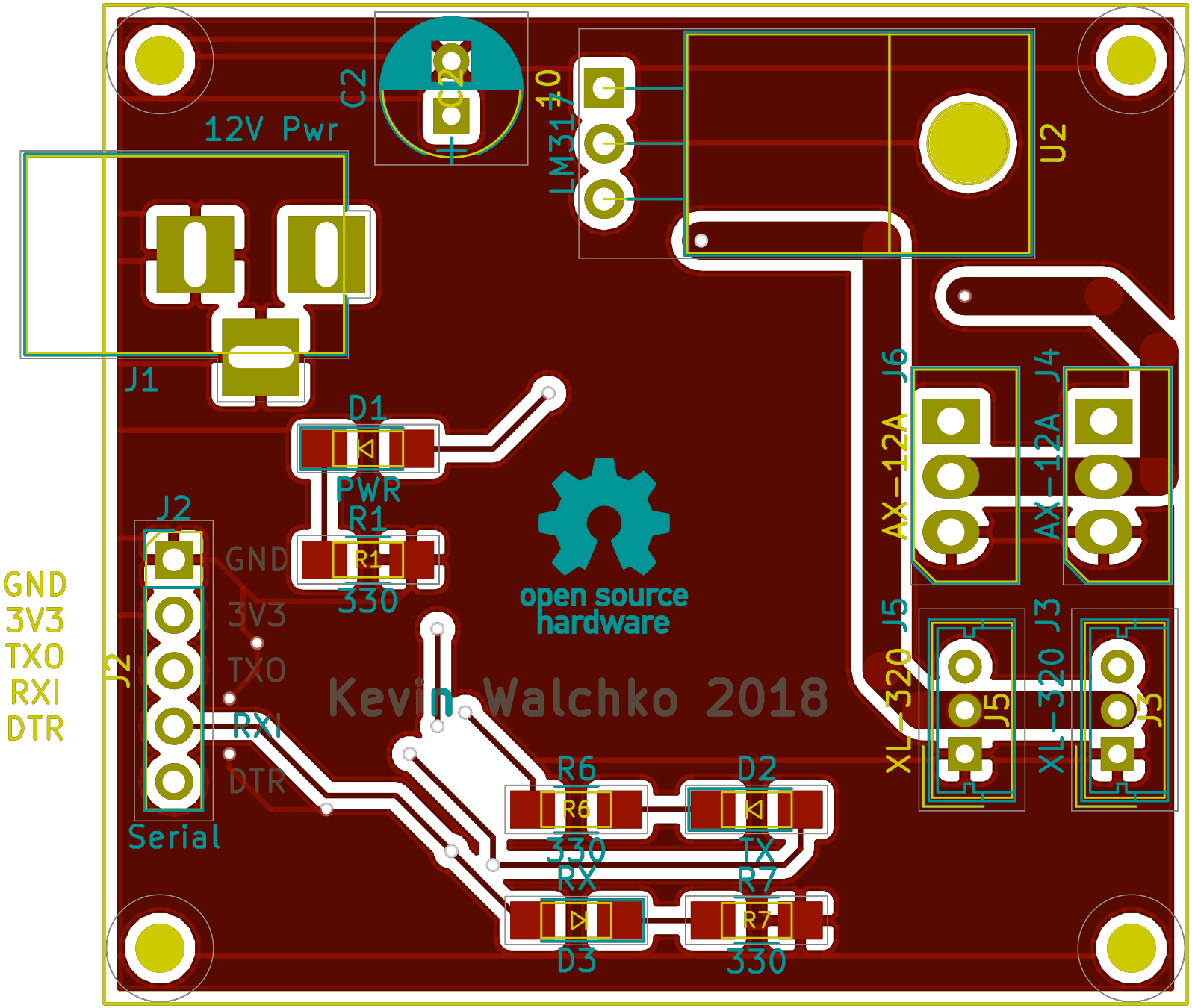
12V Pwr
C2
LM317
U2
J1
D1
PWR
R1
330
J2
GND
3V3
TXO
RXI
DTR
Serial
open source
hardware
Kevin Walchko 2018
R6
330
D2
TX
RX
R7
D3
330
J6
AX-12A
J4
AX-12A
J5
XL-320
J3
XL-320

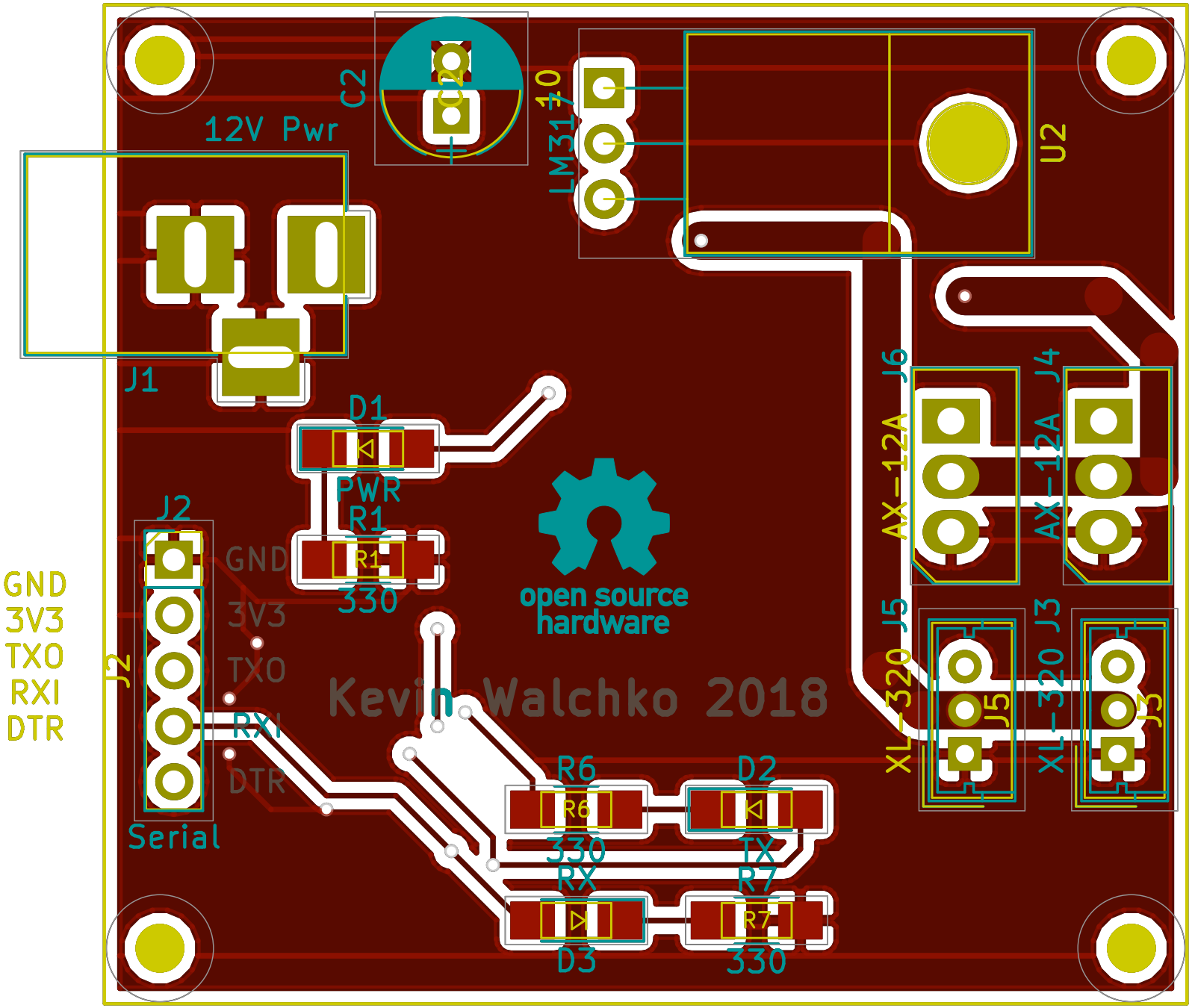
12V Pwr
C2
LM317
U2
J1
D1
PWR
R1
330
J2
GND
3V3
TXO
RXI
DTR
Serial
open source
hardware
Kevin Walchko 2018
R6
330
D2
TX
RX
R7
D3
330
J6
AX-12A
J4
AX-12A
J5
XL-320
J3
XL-320

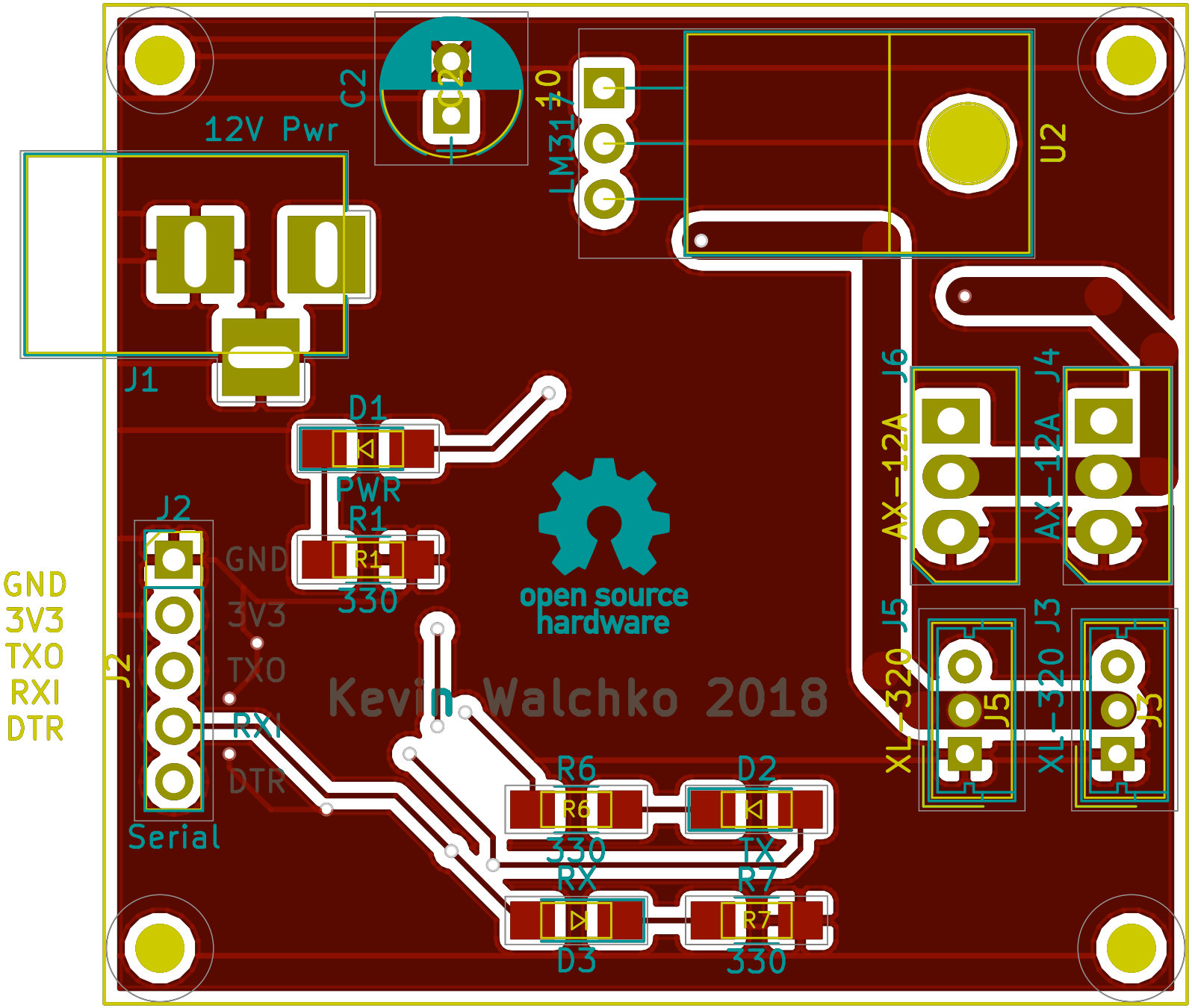
12V Pwr
C2
LM317
U2
J1
D1
PWR
R1
330
J2
GND
3V3
TXO
RXI
DTR
Serial
open source
hardware
Kevin Walchko 2018
R6
330
D2
TX
RX
R7
D3
330
J6
AX-12A
J4
AX-12A
J5
XL-320
J3
XL-320

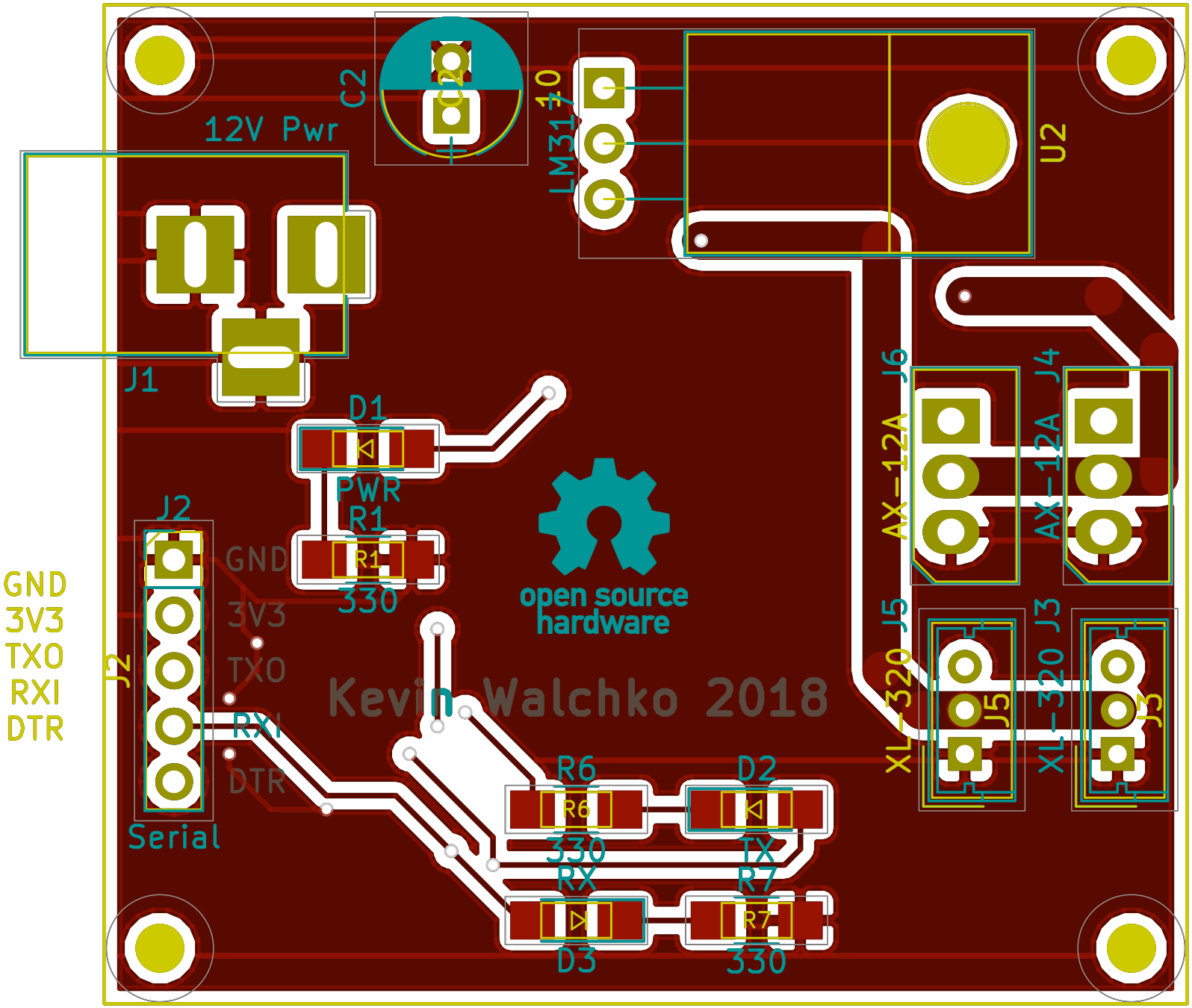
12V Pwr
C2
LM317
U2
J1
D1
PWR
R1
330
J2
GND
3V3
TXO
RXI
DTR
Serial
open source
hardware
Kevin Walchko 2018
R6
330
D2
TX
RX
R7
D3
330
J6
AX-12A
J4
AX-12A
J5
XL-320
J3
XL-320