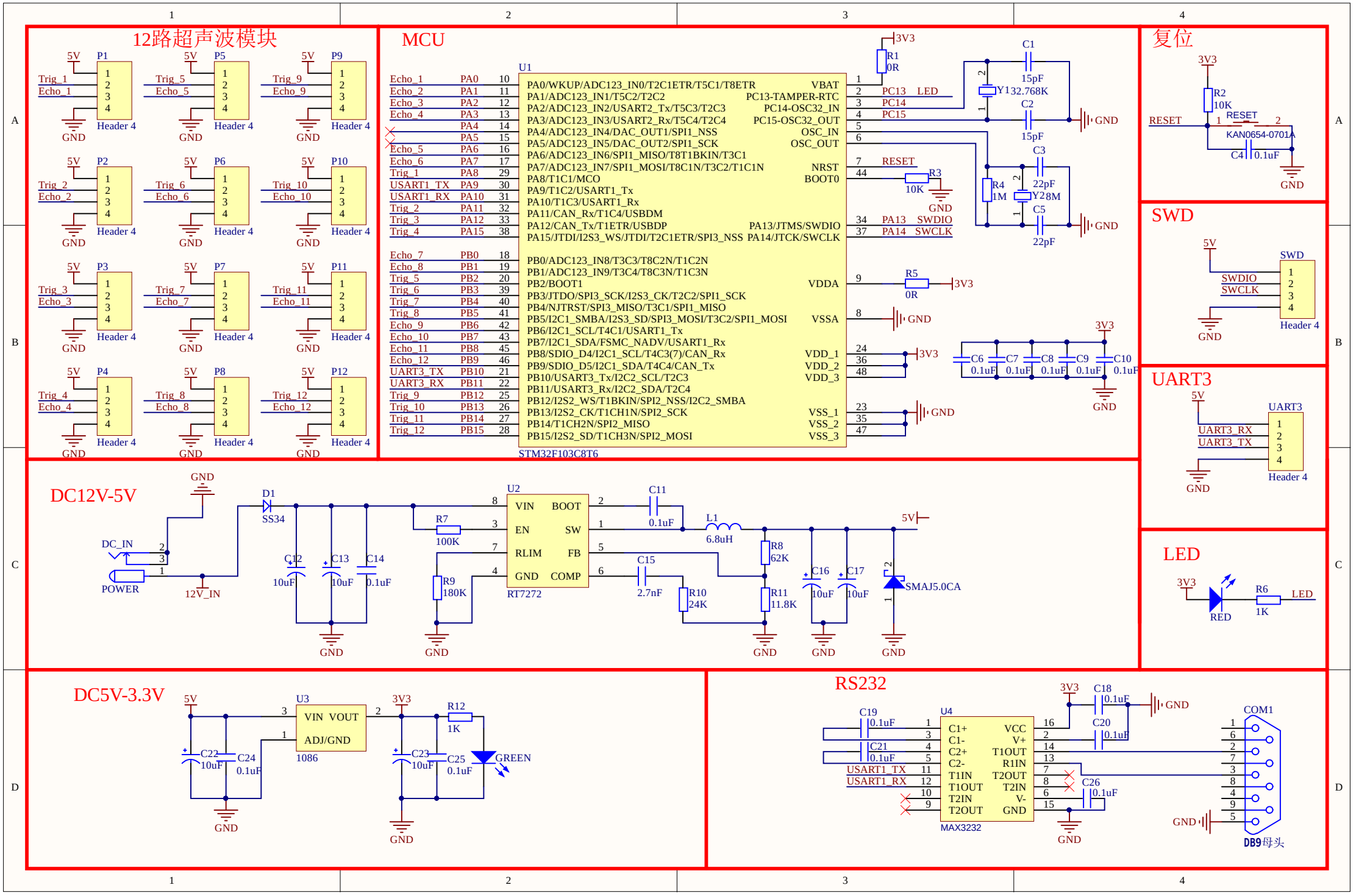
12路超声波模块
P1 Trig_1 Echo_1
P2 Trig_2 Echo_2
P3 Trig_3 Echo_3
P4 Trig_4 Echo_4
P5 Trig_5 Echo_5
P6 Trig_6 Echo_6
P7 Trig_7 Echo_7
P8 Trig_8 Echo_8
P9 Trig_9 Echo_9
P10 Trig_10 Echo_10
P11 Trig_11 Echo_11
P12 Trig_12 Echo_12
5V
GND
Header 4
MCU
U1
STM32F103C8T6
PA0/WKUP/ADC123_IN0/T2C1ETR/T5C1/T8ETR
PA1/ADC123_IN1/T5C2/T2C2
PA2/ADC123_IN2/USART2_Tx/T5C3/T2C3
PA3/ADC123_IN3/USART2_Rx/T5C4/T2C4
PA4/ADC123_IN4/DAC_OUT1/SPI1_NSS
PA5/ADC123_IN5/DAC_OUT2/SPI1_SCK
PA6/ADC123_IN6/SPI1_MISO/T8T1BKIN/T3C1
PA7/ADC123_IN7/SPI1_MOSI/T8C1N/T3C2/T1C1N
PA8/T1C1/MCO
PA9/T1C2/USART1_Tx
PA10/T1C3/USART1_Rx
PA11/CAN_Rx/T1C4/USBDM
PA12/CAN_Tx/T1ETR/USBDP
PA15/JTDI/I2S3_WS/JTDI/T2C1ETR/SPI3_NSS
PB0/ADC123_IN8/T3C3/T8C2N/T1C2N
PB1/ADC123_IN9/T3C4/T8C3N/T1C3N
PB2/BOOT1
PB3/JTDO/SPI3_SCK/I2S3_CK/T2C2/SPI1_SCK
PB4/NJTRST/SPI3_MISO/T3C1/SPI1_MISO
PB5/I2C1_SMBA/I2S3_SD/SPI3_MOSI/T3C2/SPI1_MOSI
PB6/I2C1_SCL/T4C1/USART1_Tx
PB7/I2C1_SDA/FSMC_NADV/USART1_Rx
PB8/SDIO_D4/I2C1_SCL/T4C3(7)/CAN_Rx
PB9/SDIO_D5/I2C1_SDA/T4C4/CAN_Tx
PB10/USART3_Tx/I2C2_SCL/T2C3
PB11/USART3_Rx/I2C2_SDA/T2C4
PB12/I2S2_WS/T1BKIN/SPI2_NSS/I2C2_SMBA
PB13/I2S2_CK/T1CH1N/SPI2_SCK
PB14/T1CH2N/SPI2_MISO
PB15/I2S2_SD/T1CH3N/SPI2_MOSI
VBAT
PC13-TAMPER-RTC
PC14-OSC32_IN
PC15-OSC32_OUT
OSC_IN
OSC_OUT
NRST
BOOT0
VDDA
VSSA
VDD_1
VDD_2
VDD_3
VSS_1
VSS_2
VSS_3
PC13 LED
PC14
PC15
RESET
PA13 SWDIO
PA14 SWCLK
3V3
R1 0R
R3 10K
R4 1M
R5 0R
C1 15pF
C2 15pF
C3 22pF
C5 22pF
Y1 32.768K
Y2 8M
C6 0.1uF
C7 0.1uF
C8 0.1uF
C9 0.1uF
C10 0.1uF
复位
R2 10K
RESET
KAN0654-0701A
C4 0.1uF
SWD
SWDIO
SWCLK
UART3
UART3_RX
UART3_TX
LED
R6 1K
RED
DC12V-5V
DC_IN
POWER
12V_IN
D1 SS34
C12 10uF
C13 10uF
C14 0.1uF
U2
RT7272
VIN
BOOT
EN
SW
RLIM
FB
GND
COMP
R7 100K
R9 180K
C11 0.1uF
L1 6.8uH
C15 2.7nF
R10 24K
R8 62K
R11 11.8K
C16 10uF
C17 10uF
SMAJ5.0CA
5V
DC5V-3.3V
U3
1086
VIN VOUT
ADJ/GND
C22 10uF
C24 0.1uF
C23 10uF
C25 0.1uF
R12 1K
GREEN
RS232
U4
MAX3232
C1+
C1-
C2+
C2-
T1IN
T1OUT
T2IN
T2OUT
VCC
V+
R1IN
V-
C18 0.1uF
C19 0.1uF
C20 0.1uF
C21 0.1uF
C26 0.1uF
COM1
DB9母头

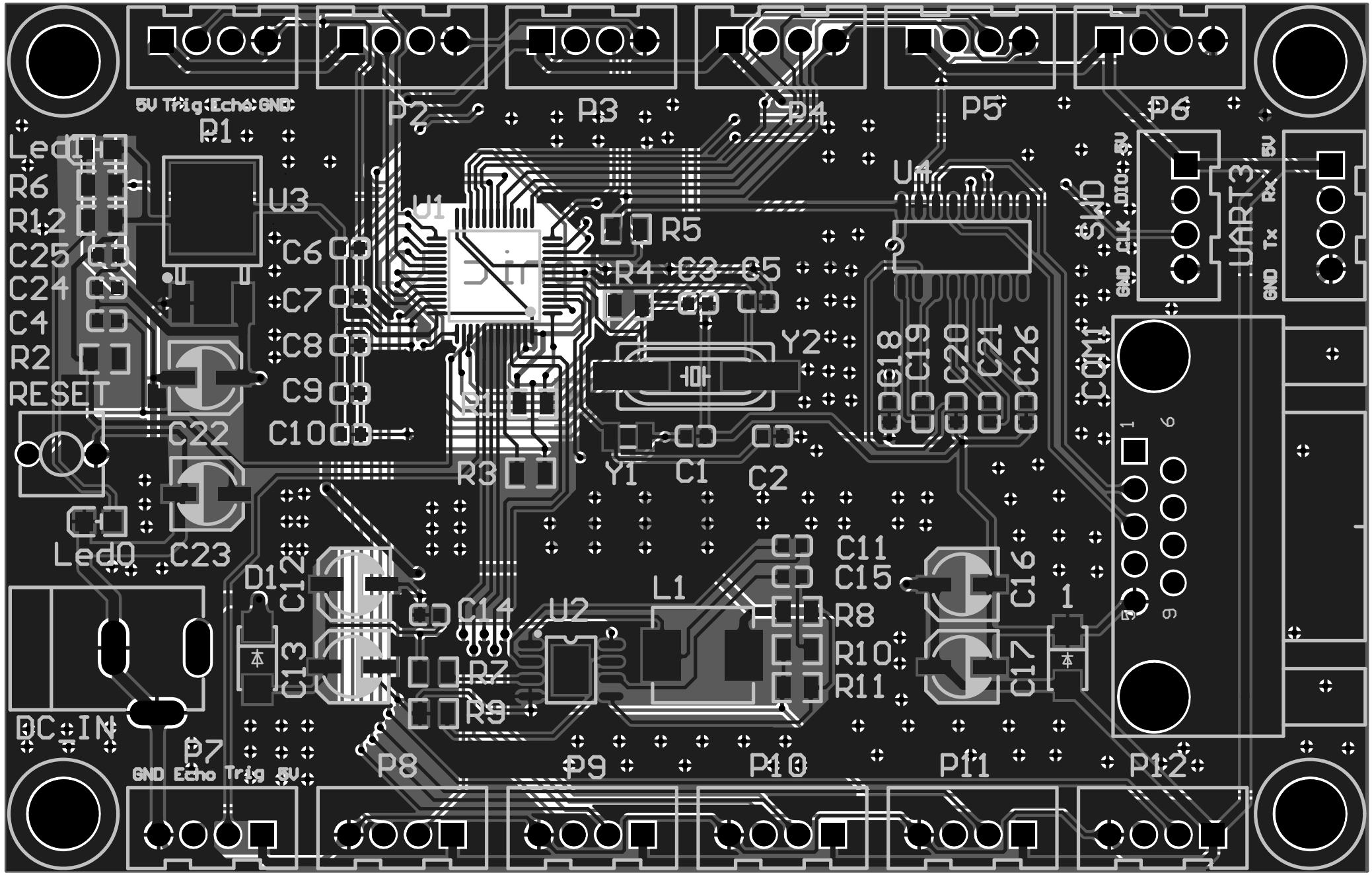
5V Trig Echo GND
P1
P2
P3
P4
P5
P6
Led
R6
R12
C25
C24
C4
R2
RESET
U3
U1
C6
C7
C8
C9
C10
C22
C23
Led0
R5
R4
C3
C5
Y2
R3
Y1
C1
C2
U4
SWD
GND CLK DIO 5V
UART3
GND Tx Rx 5V
C18
C19
C20
C21
C26
COM1
C11
C15
L1
R8
R10
R11
C16
C17
1
D1
C12
C13
C14
U2
R7
R9
DC-IN
P7
GND Echo Trig 5V
P8
P9
P10
P11
P12