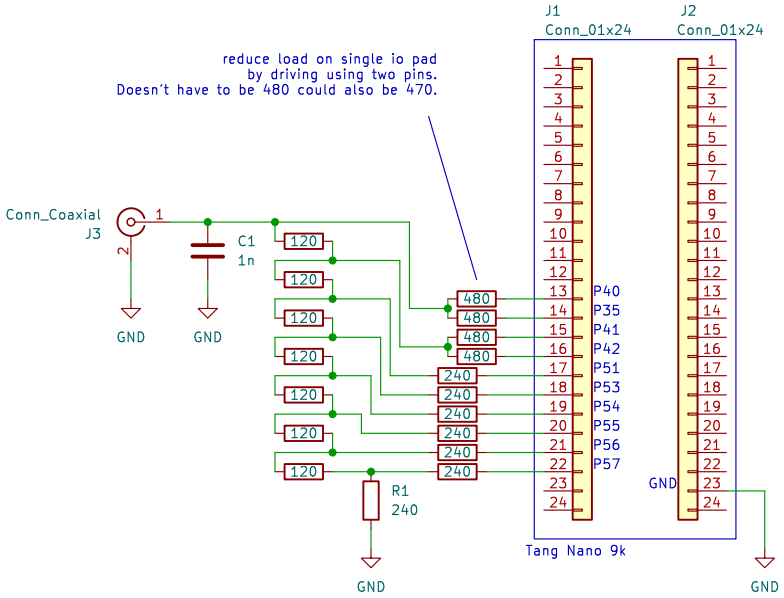

Sheet: /
File: circuit.kicad_sch

Title: Tang Nano 9k Composite Video DAC

Size: A5	Date: 2024-01-17	Rev:
KiCad E.D.A. kicad 7.0.6+dfsg-1		Id: 1/1