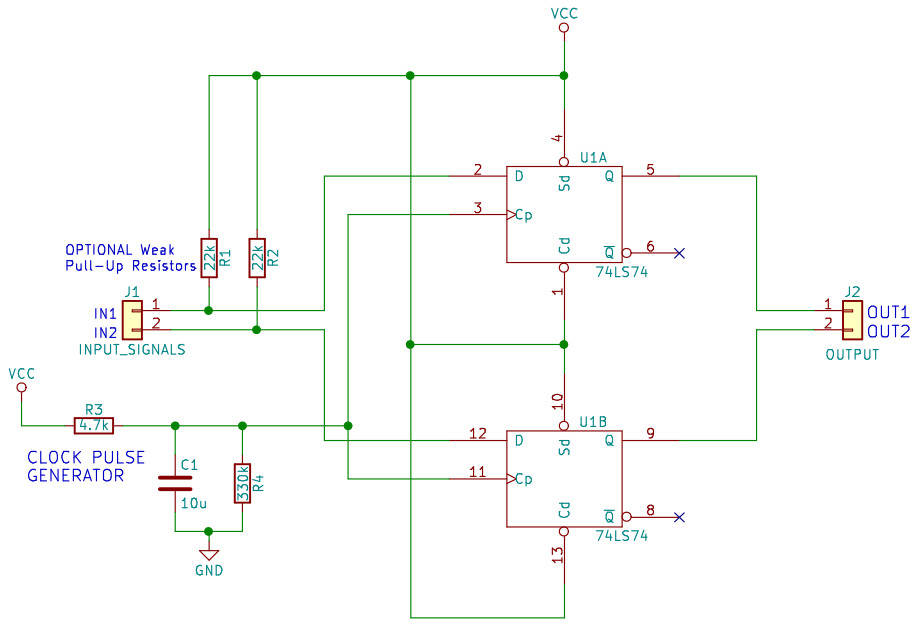

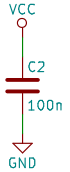

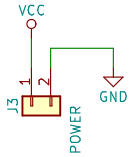

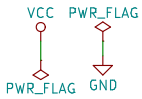

SukkoPera

Sheet: /

File: OpenAmigaMouseTrigger.sch

Title: OpenAmigaMouseTrigger

Size: A4	Date: 2018-05-29	**Rev: 2**
KiCad E.D.A. kicad 4.0.7		Id: 1/1