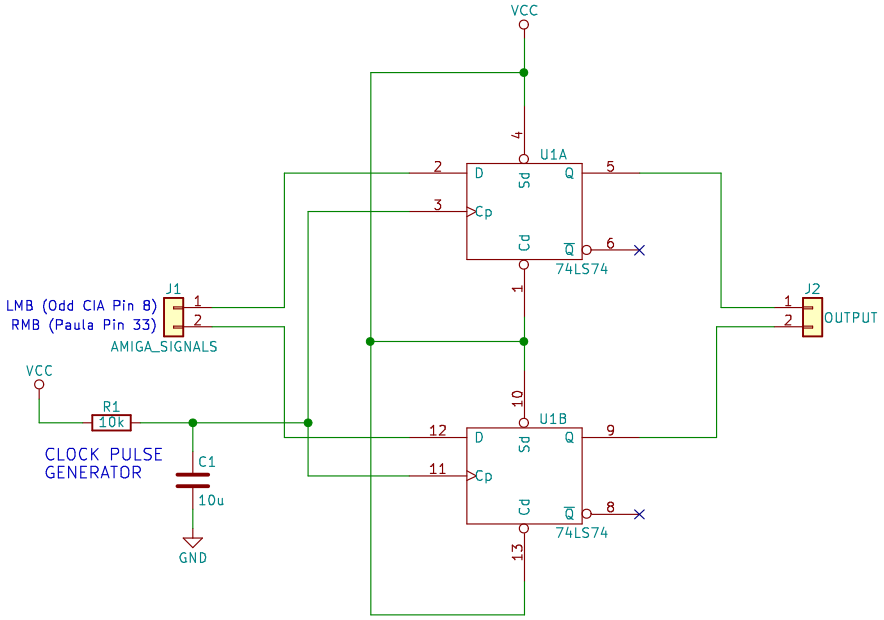

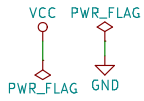

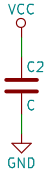

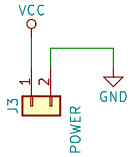

SukkoPera

Sheet: /

File: OpenAmigaMouseTrigger.sch

Title: OpenAmigaMouseTrigger

Size: A4	Date: 2017-12-18	**Rev: 20171218**
KiCad E.D.A. kicad 4.0.7		Id: 1/1