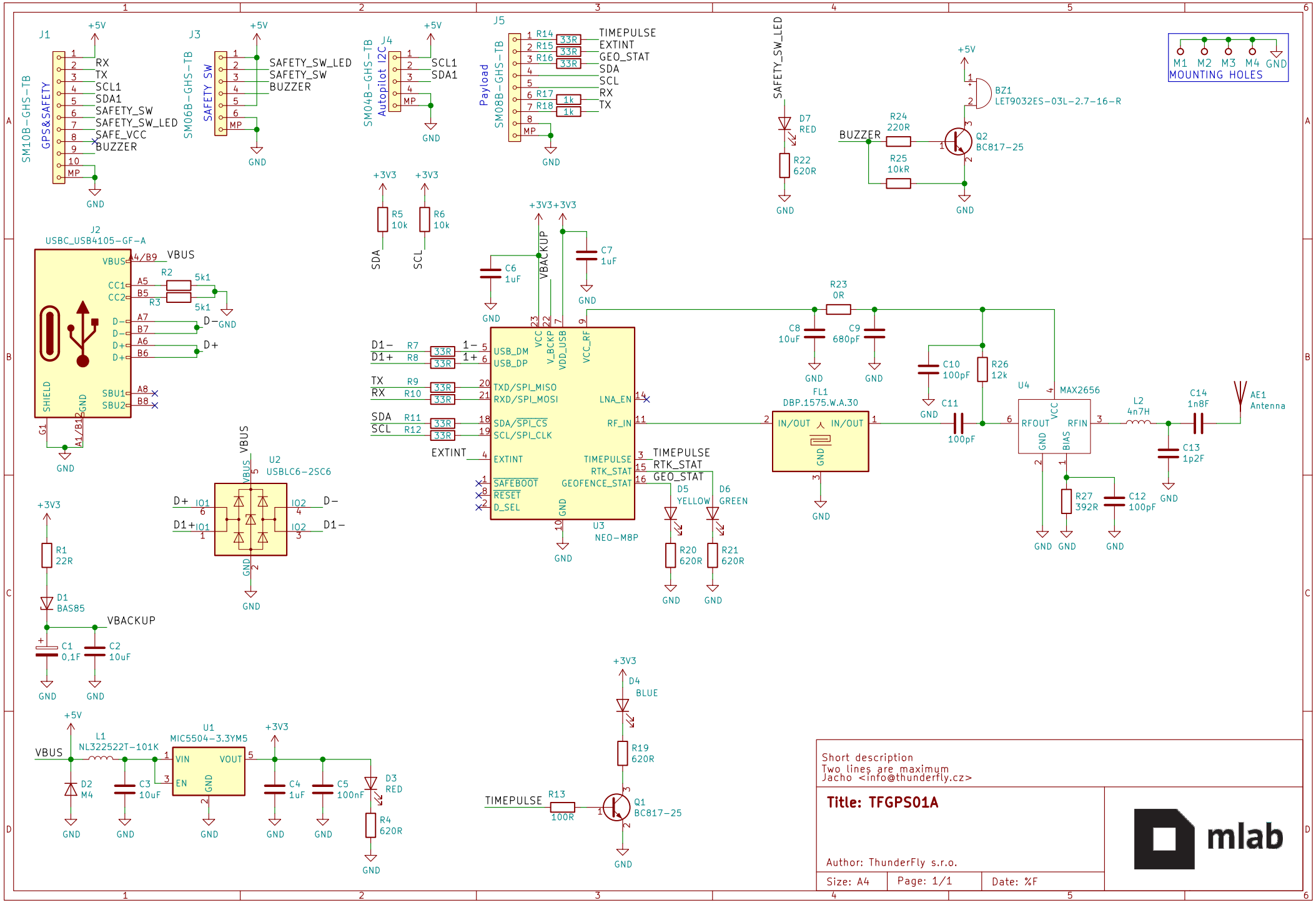
J1
SM10B-GHS-TB
GPS&SAFETY
+5V
RX
TX
SCL1
SDA1
SAFETY_SW
SAFETY_SW_LED
SAFE_VCC
BUZZER
MP
GND
J3
SM06B-GHS-TB
SAFETY SW
SAFETY_SW_LED
SAFETY_SW
BUZZER
J4
SM04B-GHS-TB
Autopilot I2C
SCL1
SDA1
J5
SM08B-GHS-TB
Payload
R14 33R TIMEPULSE
R15 33R EXTINT
R16 33R GEO_STAT
SDA
SCL
R17 1k RX
R18 1k TX
SAFETY_SW_LED
D7 RED
R22 620R
BZ1 LET9032ES-03L-2.7-16-R
BUZZER
R24 220R
R25 10kR
Q2 BC817-25
M1 M2 M3 M4 GND
MOUNTING HOLES
+3V3
R5 10k
R6 10k
J2
USBC_USB4105-GF-A
VBUS
CC1
CC2
R2 5k1
R3 5k1
D-
D+
SHIELD
SBU1
SBU2
G1
A1/B12
VBACKUP
C6 1uF
C7 1uF
R23 0R
C8 10uF
C9 680pF
C10 100pF
R26 12k
C11 100pF
FL1
DBP.1575.W.A.30
IN/OUT
U4
MAX2656
RFOUT
RFIN
VCC
BIAS
L2 4n7H
C14 1n8F
AE1 Antenna
C13 1p2F
R27 392R
C12 100pF
D1-
D1+
R7 33R
R8 33R
TX
RX
R9 33R
R10 33R
SDA
SCL
R11 33R
R12 33R
EXTINT
USB_DM
USB_DP
TXD/SPI_MISO
RXD/SPI_MOSI
SDA/SPI_CS
SCL/SPI_CLK
EXTINT
SAFEBOOT
RESET
D_SEL
VCC
V_BCKP
VDD_USB
VCC_RF
LNA_EN
RF_IN
TIMEPULSE
RTK_STAT
GEOFENCE_STAT
U3
NEO-M8P
D5 YELLOW
D6 GREEN
R20 620R
R21 620R
U2
USBLC6-2SC6
IO1
IO2
R1 22R
D1 BAS85
C1 0,1F
C2 10uF
L1
NL322522T-101K
U1
MIC5504-3.3YM5
VIN
VOUT
EN
D2 M4
C3 10uF
C4 1uF
C5 100nF
D3 RED
R4 620R
D4 BLUE
R19 620R
TIMEPULSE
R13 100R
Q1 BC817-25
Short description
Two lines are maximum
Jacho <info@thunderfly.cz>
Title: TFGPS01A
Author: ThunderFly s.r.o.
Size: A4
Page: 1/1
Date: %F
mlab