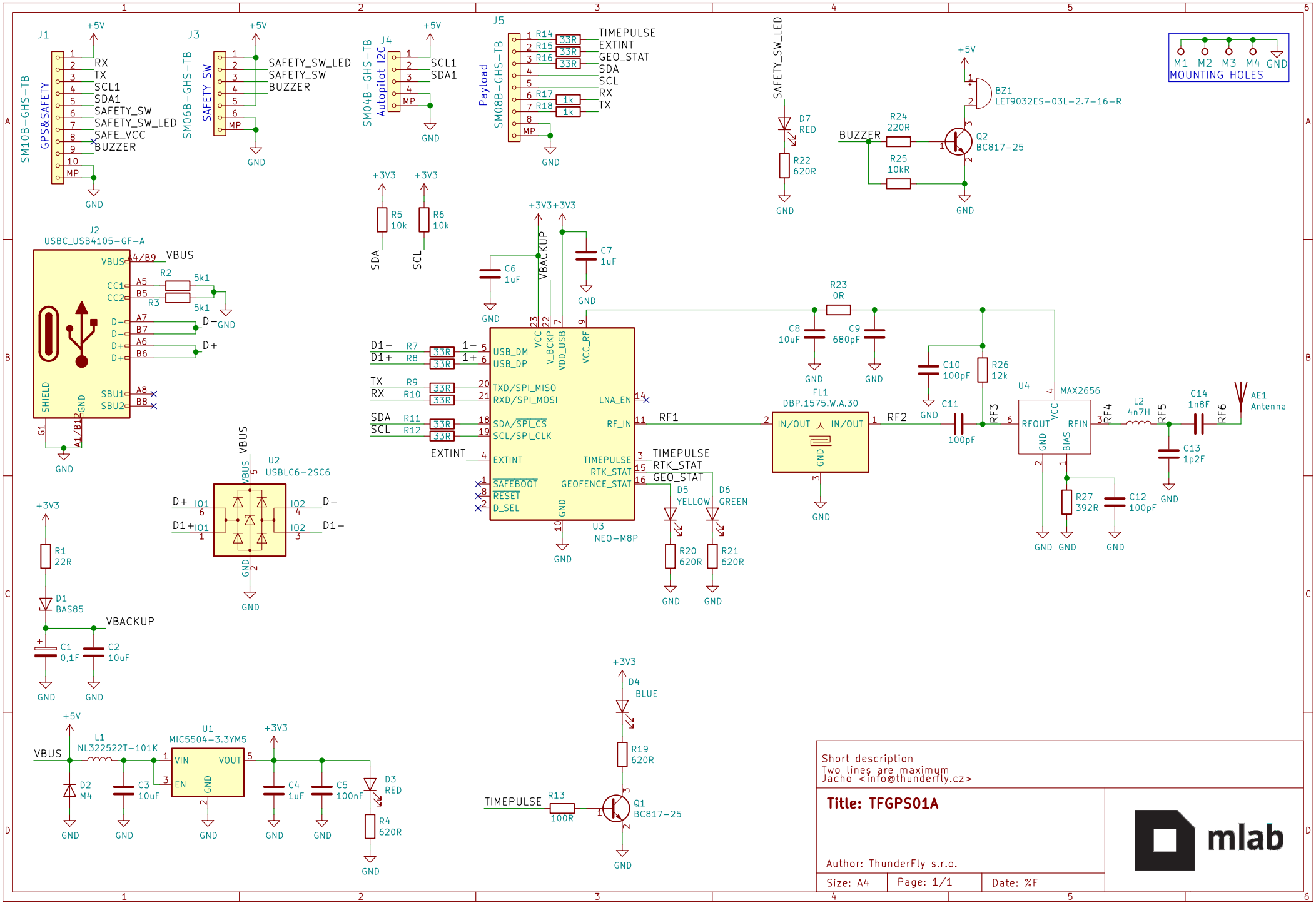
J1
SM10B-GHS-TB
GPS&SAFETY
+5V
RX
TX
SCL1
SDA1
SAFETY_SW
SAFETY_SW_LED
SAFE_VCC
BUZZER
MP
GND
J3
SM06B-GHS-TB
SAFETY SW
SAFETY_SW_LED
SAFETY_SW
BUZZER
J4
SM04B-GHS-TB
Autopilot I2C
SCL1
SDA1
J5
SM08B-GHS-TB
Payload
R14 33R TIMEPULSE
R15 33R EXTINT
R16 33R GEO_STAT
SDA
SCL
R17 1k RX
R18 1k TX
SAFETY_SW_LED
D7 RED
R22 620R
BZ1 LET9032ES-03L-2.7-16-R
BUZZER
R24 220R
R25 10kR
Q2 BC817-25
M1 M2 M3 M4 GND
MOUNTING HOLES
+3V3
R5 10k
R6 10k
J2
USBC_USB4105-GF-A
VBUS
CC1
CC2
R2 5k1
R3 5k1
D-
D+
SHIELD
SBU1
SBU2
G1
A1/B12
U2
USBLC6-2SC6
IO1
IO2
VBUS
R1 22R
D1 BAS85
VBACKUP
C1 0,1F
C2 10uF
U1
MIC5504-3.3YM5
VIN
VOUT
EN
L1 NL322522T-101K
D2 M4
C3 10uF
C4 1uF
C5 100nF
D3 RED
R4 620R
C6 1uF
C7 1uF
VBACKUP
U3
NEO-M8P
USB_DM
USB_DP
TXD/SPI_MISO
RXD/SPI_MOSI
SDA/SPI_CS
SCL/SPI_CLK
EXTINT
SAFEBOOT
RESET
D_SEL
VCC
V_BCKP
VDD_USB
VCC_RF
LNA_EN
RF_IN
TIMEPULSE
RTK_STAT
GEOFENCE_STAT
R7 33R D1-
R8 33R D1+
R9 33R TX
R10 33R RX
R11 33R SDA
R12 33R SCL
D5 YELLOW
D6 GREEN
R20 620R
R21 620R
R23 0R
C8 10uF
C9 680pF
FL1
DBP.1575.W.A.30
IN/OUT
RF1
RF2
C10 100pF
C11 100pF
R26 12k
U4
MAX2656
RFOUT
RFIN
BIAS
RF3
RF4
RF5
RF6
L2 4n7H
C14 1n8F
C13 1p2F
R27 392R
C12 100pF
AE1 Antenna
D4 BLUE
R19 620R
TIMEPULSE
R13 100R
Q1 BC817-25
Short description
Two lines are maximum
Jacho <info@thunderfly.cz>
Title: TFGPS01A
Author: ThunderFly s.r.o.
Size: A4
Page: 1/1
Date: %F
mlab