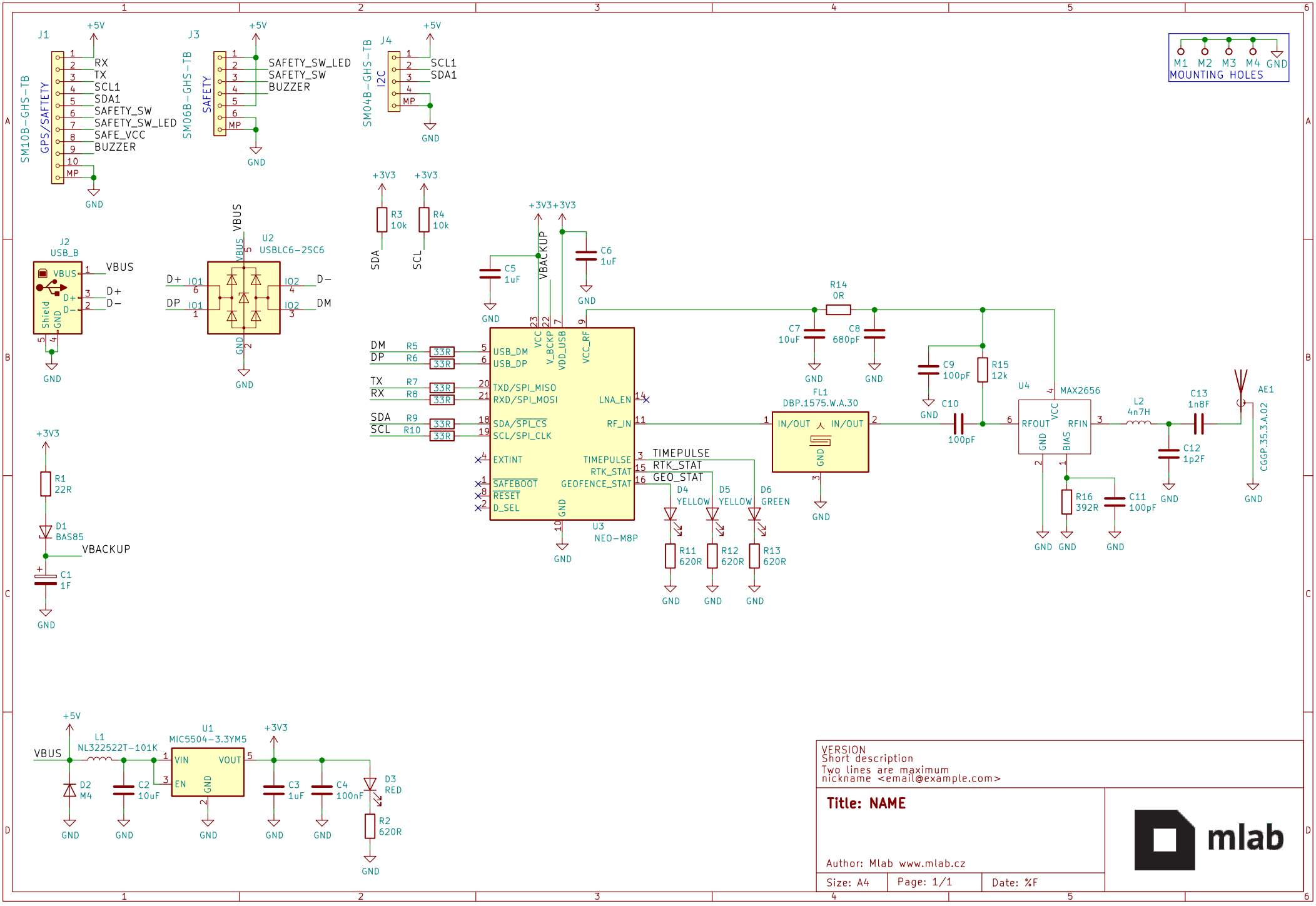
J1
SM10B-GHS-TB
GPS/SAFTETY
+5V
RX
TX
SCL1
SDA1
SAFETY_SW
SAFETY_SW_LED
SAFE_VCC
BUZZER
MP
GND
J3
SM06B-GHS-TB
SAFETY
SAFETY_SW_LED
SAFETY_SW
BUZZER
J4
SM04B-GHS-TB
I2C
SCL1
SDA1
M1 M2 M3 M4 GND
MOUNTING HOLES
J2
USB_B
VBUS
D+
D-
Shield
U2
USBLC6-2SC6
IO1
IO2
DP
DM
+3V3
R3 10k
R4 10k
SDA
SCL
C5 1uF
C6 1uF
VBACKUP
R14 0R
C7 10uF
C8 680pF
C9 100pF
R15 12k
C10 100pF
FL1
DBP.1575.W.A.30
IN/OUT
U4
MAX2656
RFOUT
RFIN
VCC
BIAS
L2 4n7H
C13 1n8F
C12 1p2F
AE1
CGGP.35.3.A.02
R16 392R
C11 100pF
R5 33R
R6 33R
R7 33R
R8 33R
R9 33R
R10 33R
TX
RX
USB_DM
USB_DP
TXD/SPI_MISO
RXD/SPI_MOSI
SDA/SPI_CS
SCL/SPI_CLK
EXTINT
SAFEBOOT
RESET
D_SEL
LNA_EN
RF_IN
TIMEPULSE
RTK_STAT
GEOFENCE_STAT
GEO_STAT
V_BCKP
VDD_USB
VCC_RF
U3
NEO-M8P
D4 YELLOW
D5 YELLOW
D6 GREEN
R11 620R
R12 620R
R13 620R
R1 22R
D1 BAS85
C1 1F
L1
NL322522T-101K
U1
MIC5504-3.3YM5
VIN
VOUT
EN
D2 M4
C2 10uF
C3 1uF
C4 100nF
D3 RED
R2 620R
VERSION
Short description
Two lines are maximum
nickname <email@example.com>
Title: NAME
Author: Mlab www.mlab.cz
Size: A4
Page: 1/1
Date: %F
mlab