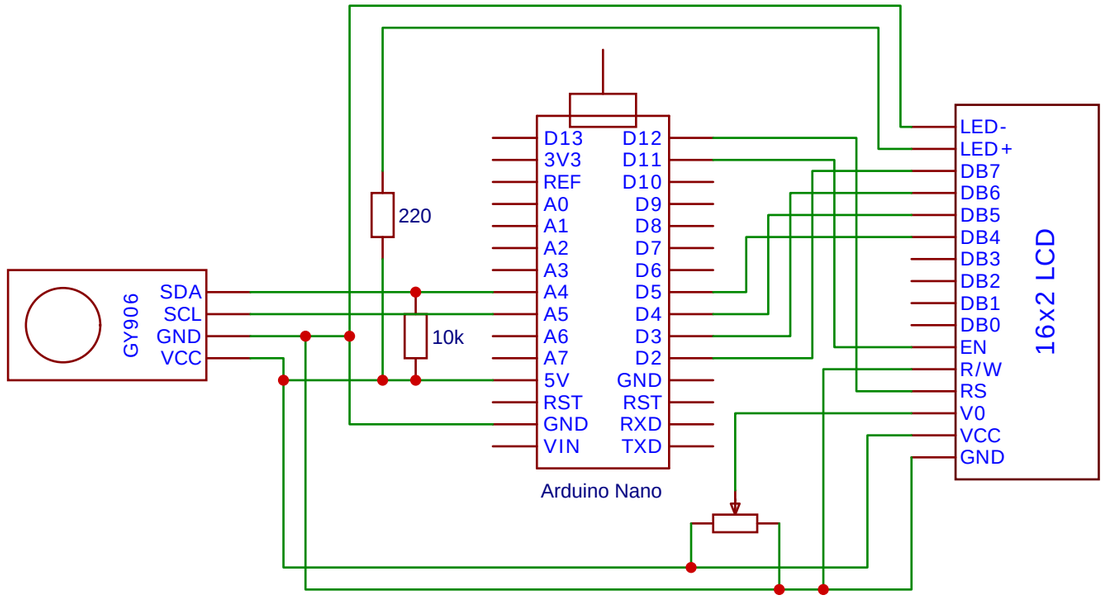

TITLE: GY906 Sensor		REV: 1.0
	Company:	Sheet: 1/1
	Date: 2020-01-01 Drawn By: vincent.piegsa	