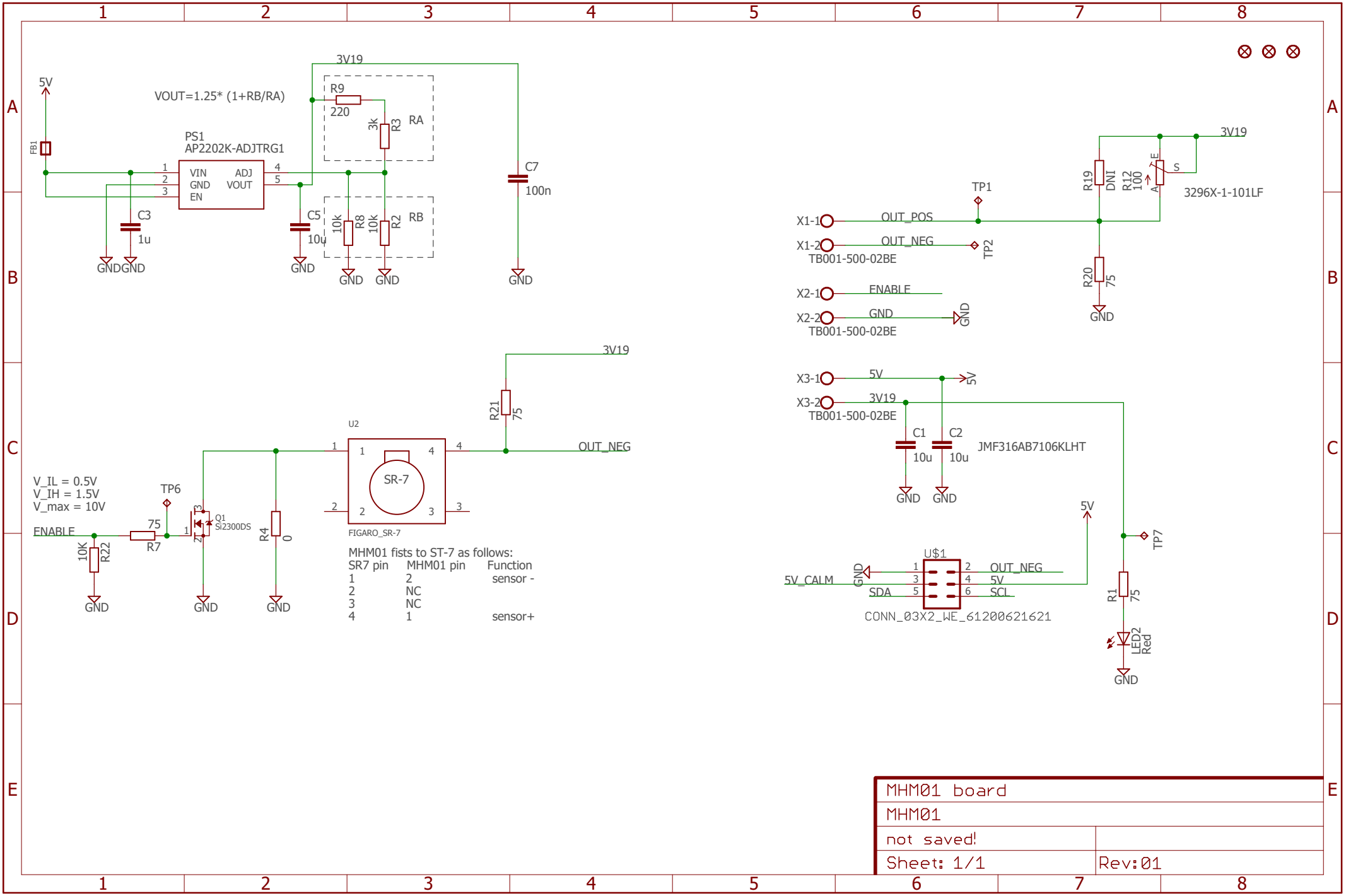
5V
FB1
VOUT=1.25* (1+RB/RA)
3V19
R9
220
3k
R3
RA
PS1
AP2202K-ADJTRG1
VIN
GND
EN
ADJ
VOUT
C3
1u
C5
10u
10k
R8
10k
R2
RB
C7
100n
GND
TP1
TP2
X1-1
OUT_POS
X1-2
OUT_NEG
TB001-500-02BE
X2-1
ENABLE
X2-2
GND
R19
DNI
R12
100
3296X-1-101LF
R20
75
X3-1
5V
X3-2
3V19
C1
10u
C2
10u
JMF316AB7106KLHT
U2
SR-7
FIGARO_SR-7
R21
75
OUT_NEG
V_IL = 0.5V
V_IH = 1.5V
V_max = 10V
TP6
ENABLE
10K
R22
75
R7
Q1
SI2300DS
R4
0
MHM01 fists to ST-7 as follows:
SR7 pin MHM01 pin Function
1 2 sensor -
2 NC
3 NC
4 1 sensor+
U$1
5V_CALL
SDA
OUT_NEG
5V
SCL
CONN_03X2_WE_61200621621
TP7
R1
75
LED2
Red
MHM01 board
MHM01
not saved!
Sheet: 1/1
Rev:01