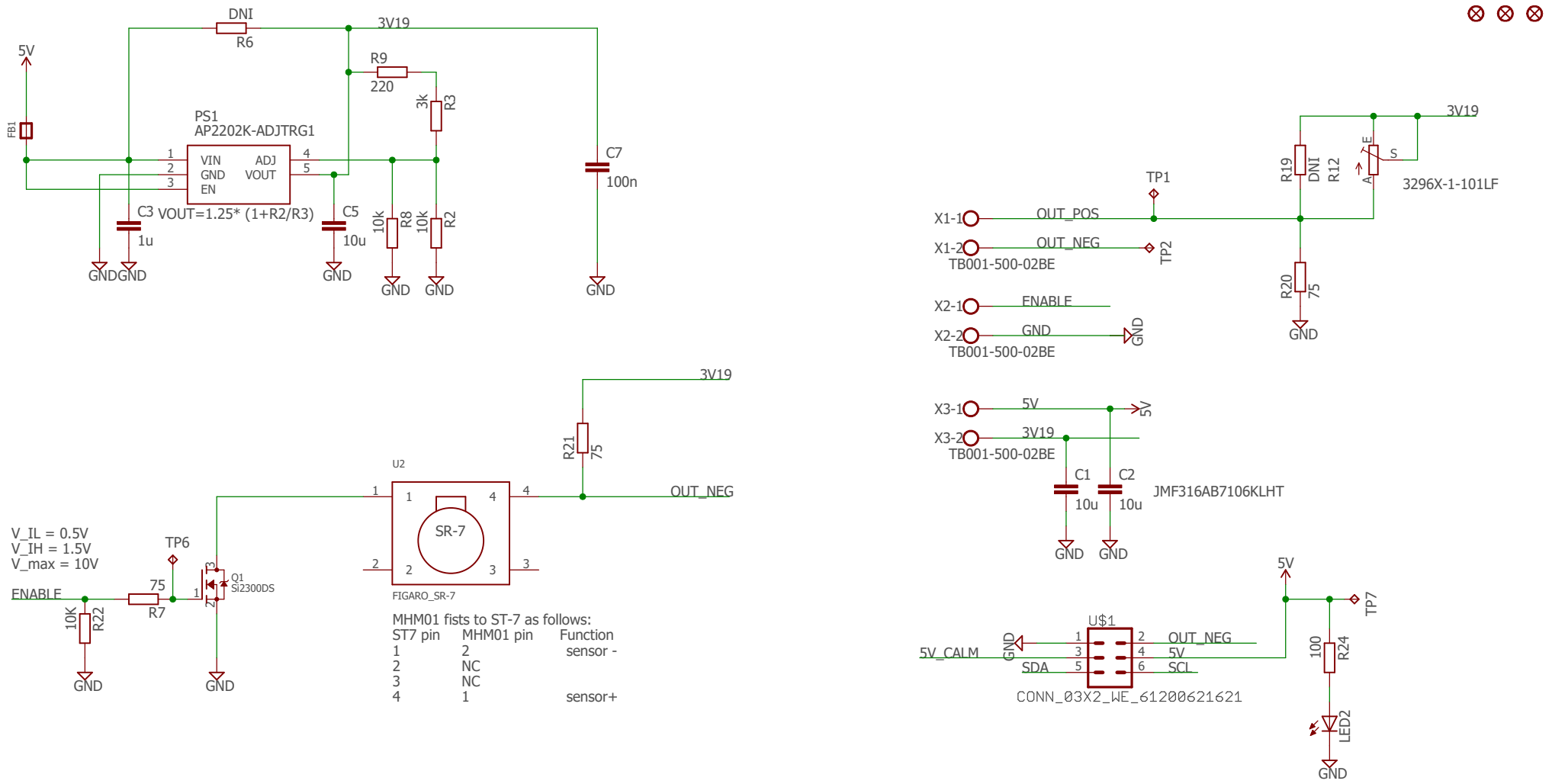

Sensor board v1	
MHM01	
29-Aug-19 08:49	
Sheet: 1/1	Rev:01