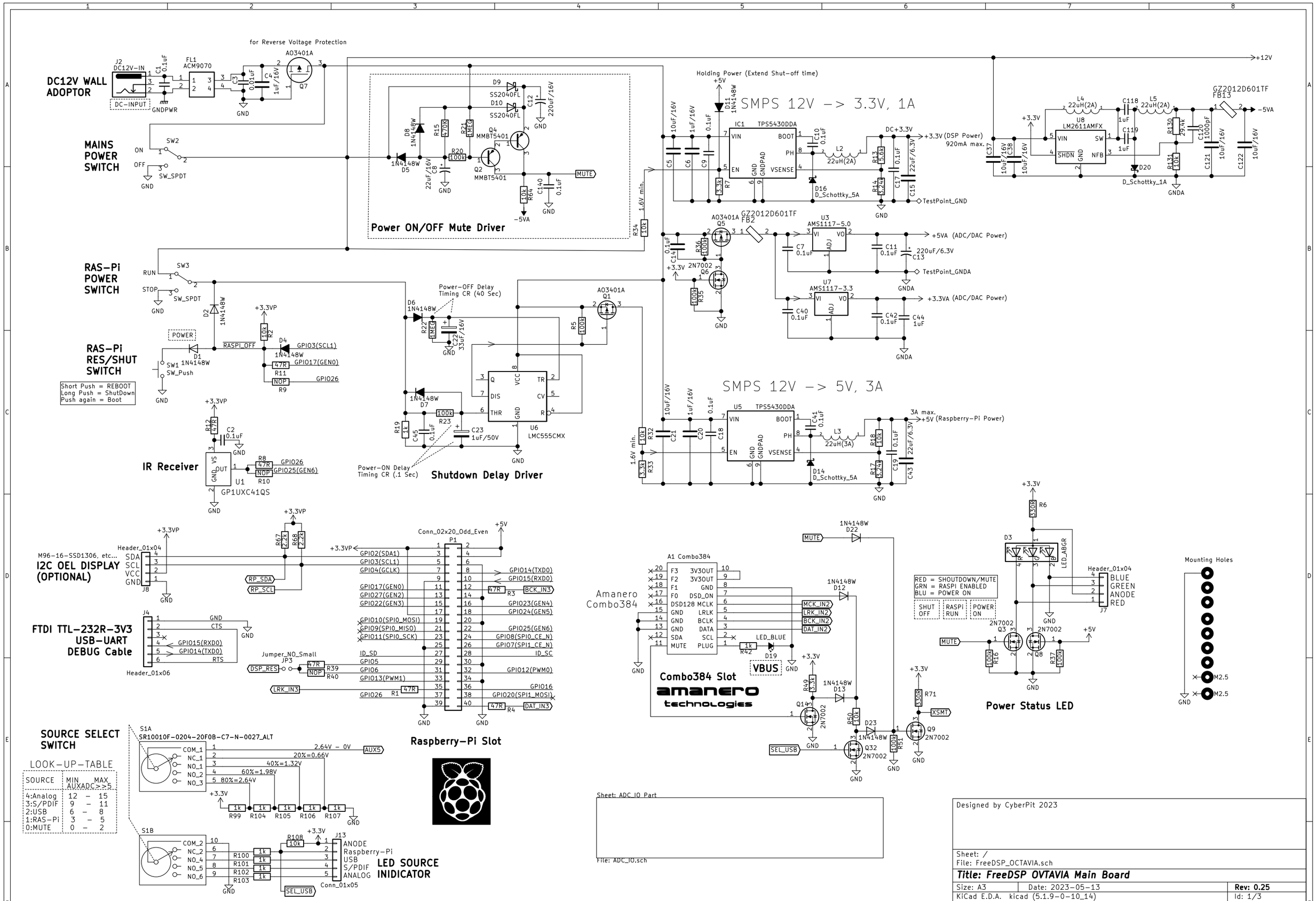
DC12V WALL ADOPTOR
MAINS POWER SWITCH
RAS-Pi POWER SWITCH
RAS-Pi RES/SHUT SWITCH
Short Push = REBOOT
Long Push = ShutDown
Push again = Boot
IR Receiver
I2C OEL DISPLAY (OPTIONAL)
FTDI TTL-232R-3V3 USB-UART DEBUG Cable
SOURCE SELECT SWITCH
LOOK-UP-TABLE
SOURCE MIN MAX
AUXADC>>5
4:Analog 12 - 15
3:S/PDIF 9 - 11
2:USB 6 - 8
1:RAS-Pi 3 - 5
0:MUTE 0 - 2
LED SOURCE INIDICATOR
Power ON/OFF Mute Driver
Shutdown Delay Driver
Raspberry-Pi Slot
SMPS 12V -> 3.3V, 1A
SMPS 12V -> 5V, 3A
Holding Power (Extend Shut-off time)
Amanero Combo384
Combo384 Slot
VBUS
Power Status LED
RED = SHOUTDOWN/MUTE
GRN = RASPI ENABLED
BLU = POWER ON
Mounting Holes
Designed by CyberPit 2023
Sheet: /
File: FreeDSP_OCTAVIA.sch
Title: FreeDSP OVTAVIA Main Board
Size: A3
Date: 2023-05-13
Rev: 0.25
KiCad E.D.A. kicad (5.1.9-0-10_14)
Id: 1/3

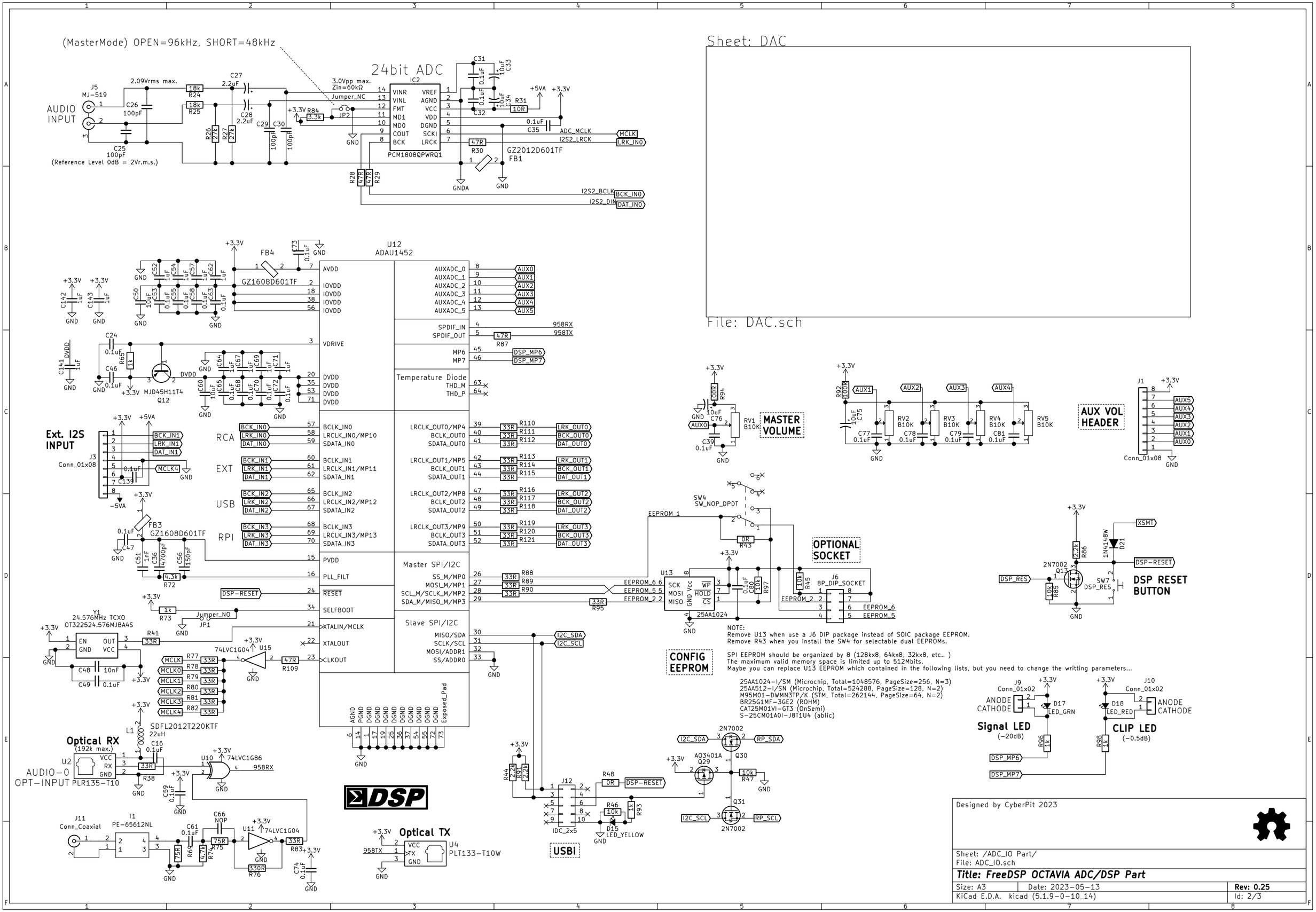
(MasterMode) OPEN=96kHz, SHORT=48kHz
24bit ADC
IC2
PCM1808QPWRQ1
AUDIO INPUT
J5
MJ-519
2.09Vrms max.
(Reference Level 0dB = 2Vr.m.s.)
3.0Vpp max.
Zin=60kΩ
Jumper_NC
JP2
ADC_MCLK
I2S2_LRCK
I2S2_BCLK
I2S2_DIN
MCLK
LRK_IN0
BCK_IN0
DAT_IN0
GZ2012D601TF
FB1
GNDA
GND
+5VA
+3.3V
Sheet: DAC
File: DAC.sch
U12
ADAU1452
GZ1608D601TF
FB4
AVDD
IOVDD
VDRIVE
DVDD
MJD45H11T4
Q12
AUXADC_0
AUXADC_1
AUXADC_2
AUXADC_3
AUXADC_4
AUXADC_5
AUX0
AUX1
AUX2
AUX3
AUX4
AUX5
SPDIF_IN
SPDIF_OUT
958RX
958TX
MP6
MP7
DSP_MP6
DSP_MP7
Temperature Diode
THD_M
THD_P
Ext. I2S INPUT
J3
Conn_01x08
BCK_IN1
LRK_IN1
DAT_IN1
MCLK4
-5VA
RCA
EXT
USB
RPI
BCLK_IN0
LRCLK_IN0/MP10
SDATA_IN0
BCLK_IN1
LRCLK_IN1/MP11
SDATA_IN1
BCLK_IN2
LRCLK_IN2/MP12
SDATA_IN2
BCLK_IN3
LRCLK_IN3/MP13
SDATA_IN3
LRCLK_OUT0/MP4
BCLK_OUT0
SDATA_OUT0
LRCLK_OUT1/MP5
BCLK_OUT1
SDATA_OUT1
LRCLK_OUT2/MP8
BCLK_OUT2
SDATA_OUT2
LRCLK_OUT3/MP9
BCLK_OUT3
SDATA_OUT3
LRK_OUT0
BCK_OUT0
DAT_OUT0
LRK_OUT1
BCK_OUT1
DAT_OUT1
LRK_OUT2
BCK_OUT2
DAT_OUT2
LRK_OUT3
BCK_OUT3
DAT_OUT3
PVDD
PLL_FILT
RESET
SELFBOOT
XTALIN/MCLK
XTALOUT
CLKOUT
DSP-RESET
Master SPI/I2C
SS_M/MP0
MOSI_M/MP1
SCL_M/SCLK_M/MP2
SDA_M/MISO_M/MP3
Slave SPI/I2C
MISO/SDA
SCLK/SCL
MOSI/ADDR1
SS/ADDR0
I2C_SDA
I2C_SCL
Exposed_Pad
Y1
24.576MHz TCXO
OT322524.576MJBA4S
74LVC1G04
U15
MCLK
MCLK0
MCLK1
MCLK2
MCLK3
MCLK4
SDFL2012T220KTF
22uH
Optical RX
(192k max.)
U2
AUDIO-O
OPT-INPUT PLR135-T10
U10
74LVC1G86
958RX
J11
Conn_Coaxial
T1
PE-65612NL
U11
74LVC1G04
Optical TX
U4
PLT133-T10W
958TX
DSP
J12
IDC_2x5
USBi
LED_YELLOW
D15
2N7002
Q30
Q31
AO3401A
Q29
RP_SDA
RP_SCL
MASTER VOLUME
RV1
B10K
AUX VOL HEADER
J1
Conn_01x08
RV2
RV3
RV4
RV5
SW4
SW_NOP_DPDT
EEPROM_1
EEPROM_6
EEPROM_5
EEPROM_2
U13
25AA1024
OPTIONAL SOCKET
J6
8P_DIP_SOCKET
NOTE:
Remove U13 when use a J6 DIP package instead of SOIC package EEPROM.
Remove R43 when you install the SW4 for selectable dual EEPROMs.
CONFIG EEPROM
SPI EEPROM should be organized by 8 (128kx8, 64kx8, 32kx8, etc..)
The maximum valid memory space is limited up to 512Mbits.
Maybe you can replace U13 EEPROM which contained in the following lists, but you need to change the writting parameters...
25AA1024-I/SM (Microchip, Total=1048576, PageSize=256, N=3)
25AA512-I/SN (Microchip, Total=524288, PageSize=128, N=2)
M95M01-DWMN3TP/K (STM, Total=262144, PageSize=64, N=2)
BR25G1MF-3GE2 (ROHM)
CAT25M01VI-GT3 (OnSemi)
S-25CM01A0I-J8T1U4 (ablic)
DSP RESET BUTTON
XSMT
DSP-RESET
DSP_RES
2N7002
Q13
SW7
1N4148W
D21
Signal LED
(-20dB)
ANODE
CATHODE
D17
LED_GRN
DSP_MP6
DSP_MP7
CLIP LED
(-0.5dB)
D18
LED_RED
J9
J10
Designed by CyberPit 2023
Sheet: /ADC_IO Part/
File: ADC_IO.sch
Title: FreeDSP OCTAVIA ADC/DSP Part
Size: A3
Date: 2023-05-13
Rev: 0.25
KiCad E.D.A. kicad (5.1.9-0-10_14)
Id: 2/3

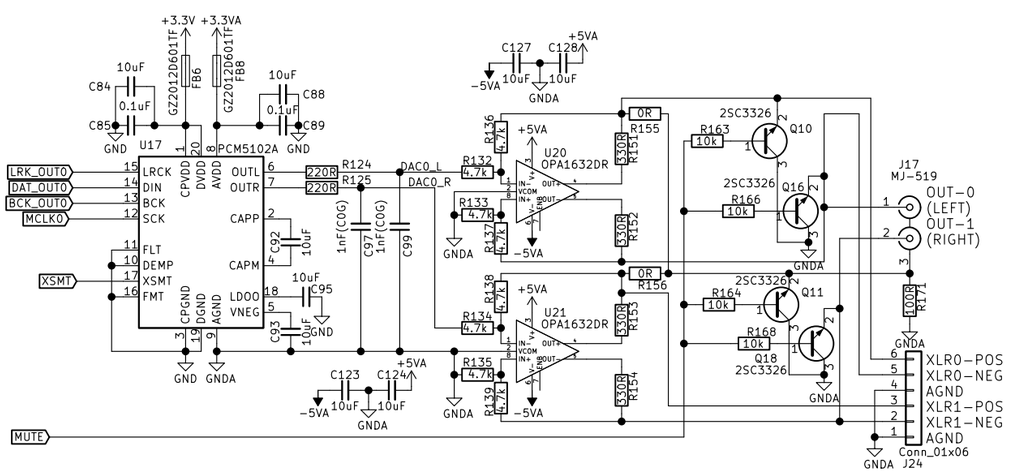

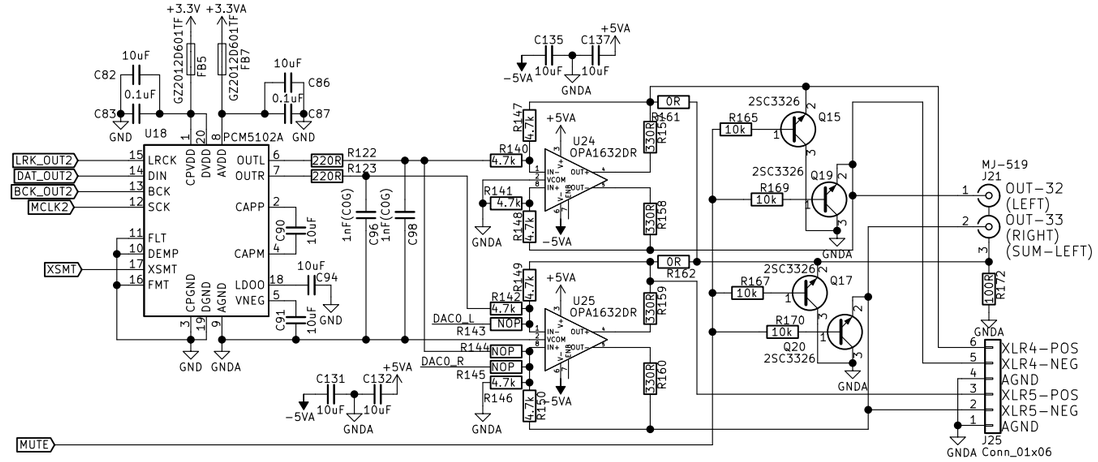

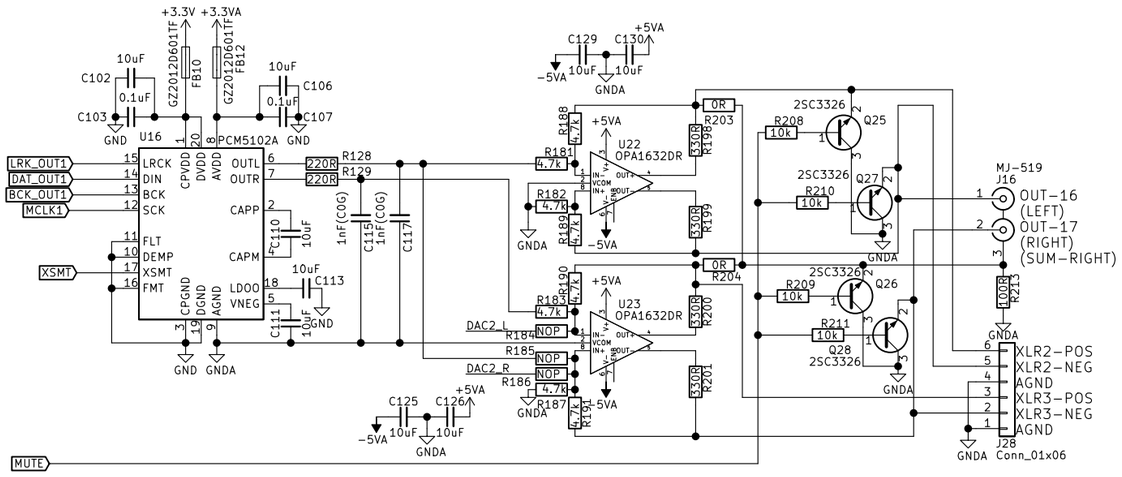

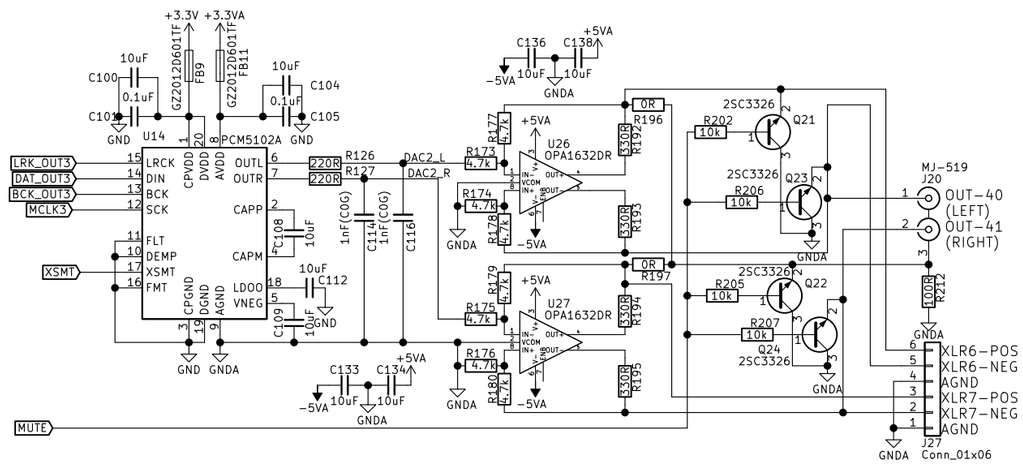

FreeDSP OVTAVIA (basic version)

NOT POPULATE : U22, U23, R182, R189, R187, R191, R199, R201, R203, R209, Q26, R208, Q25, R204, R198, R200
CHANE (to Zero Ohm): R181, R188, R183, R190, R213
JUMPER(Between): J28 pin2–Pin3, pin5–pin6

AS WELL TO THE ANOTHER PART ...

FreeDSP OVTAVIA (Differential version)

NOT POPULATE: Q25, R208 (if you want)

AS WELL TO THE ANOTHER PART ...

FreeDSP OVTAVIA (Balanced version)

NOT POPULATE: J16, R213, R203

AS WELL TO THE ANOTHER PART ...

FreeDSP OVTAVIA (Extend S/N 6dB stereo version)

NOT POPULATE:
U26, U21, Q23, Q22, Q24, J20, J27, R202, R206, R205, R207, R212, R196, R197, R192, R193, R194, R195,
R177, R173, R174, R178, R175, R179, R176, R180, U22, Q25, Q27, R208, R210, R209, R210, R203, R198, R199, R188, R181, R189, R182

CHANGE:
(to 10k) R183, R184, R185, R186
(to MJ-518 or Butique Jacks) J16

AS WELL TO THE ANOTHER PART ...

Designed by CyberPit 2023

- ☐ **FreeDSP OVTAVIA (basic version)**
- ☒ **FreeDSP OVTAVIA (Differential version)**
- ☐ **FreeDSP OVTAVIA (Balanced version)**
- ☐ **FreeDSP OVTAVIA (Extend S/N 6dB version)**

Sheet: /ADC_IO Part/DAC/
File: DAC.sch

Title: FreeDSP OCTAVIA DAC part

Size: A3	Date: 2023-05-13	**Rev: 0.25**
KiCad E.D.A. kicad (5.1.9-0-10_14)		Id: 3/3