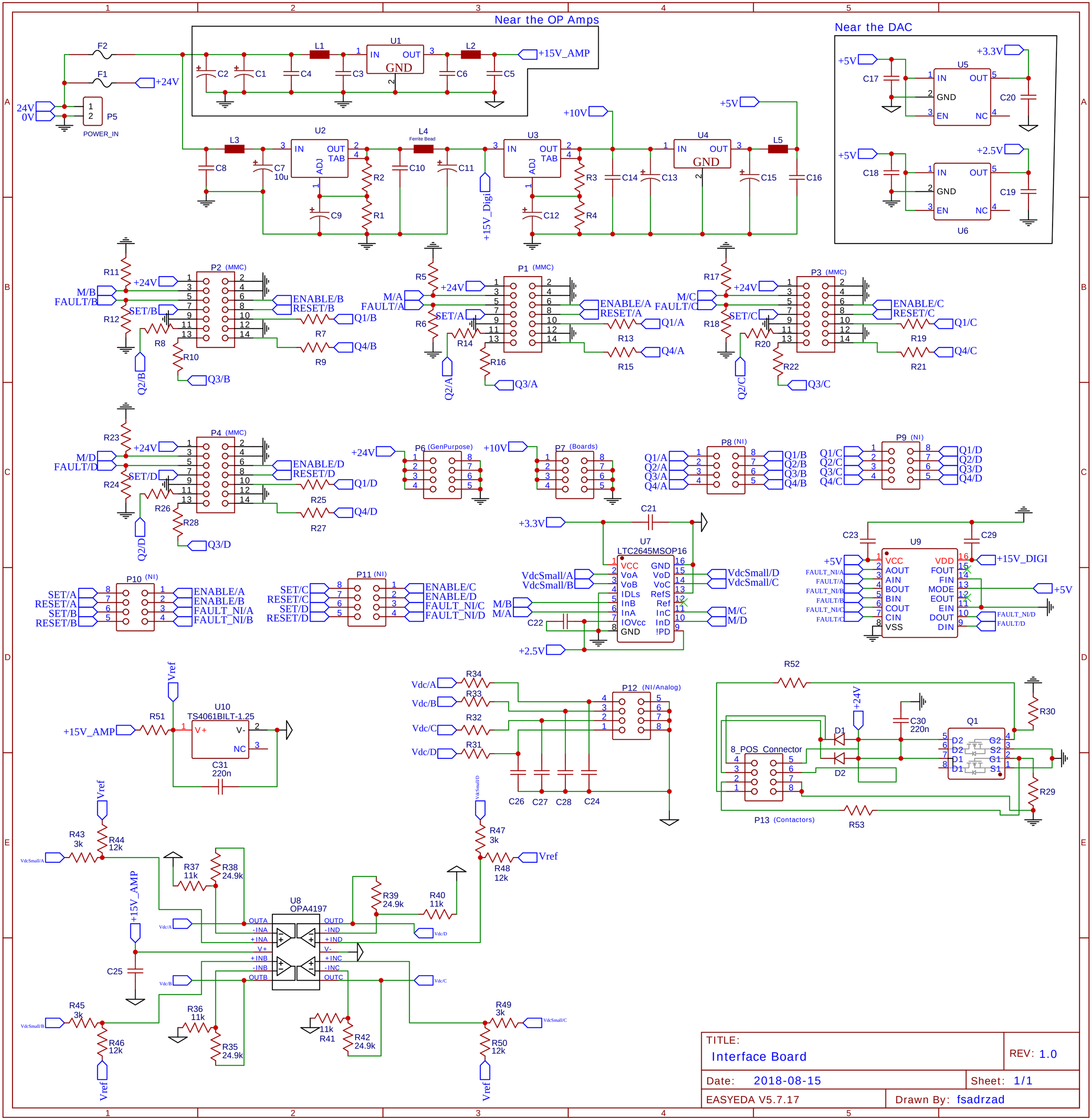

TITLE: Interface Board	REV: 1.0
Date: 2018-08-15	Sheet: 1/1
EASYEDA V5.7.17	Drawn By: fsadrzad

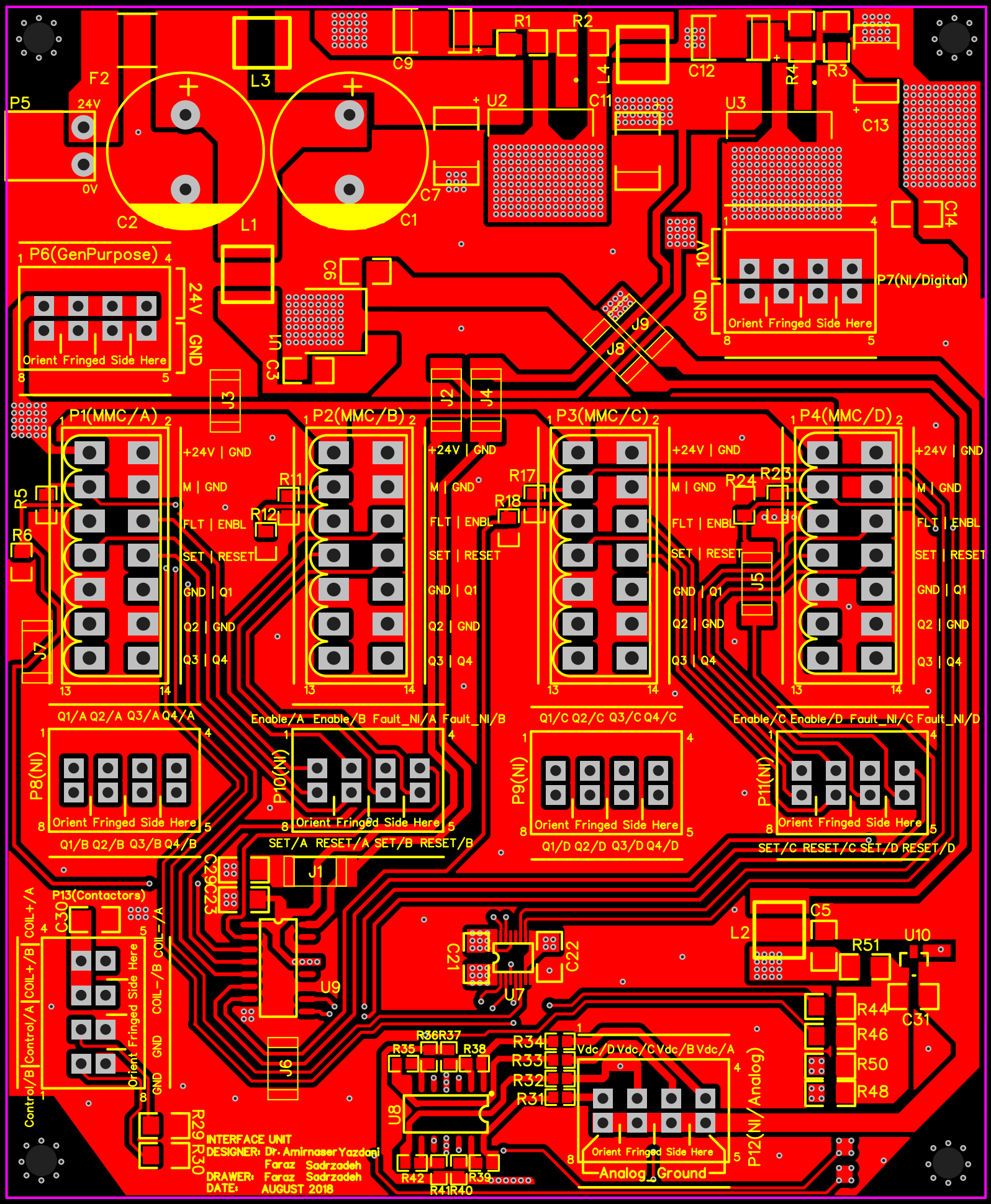
P5
24V
0V
F2
C2
C1
L3
L1
C9
R1
R2
L4
C12
R4
R3
C13
U2
C11
U3
C14
C7
C6
U1
C3
J9
J8
10V
GND
P7(NI/Digital)
Orient Fringed Side Here
P6(GenPurpose)
24V
GND
Orient Fringed Side Here
J3
J2
J4
P1(MMC/A)
P2(MMC/B)
P3(MMC/C)
P4(MMC/D)
+24V | GND
M | GND
FLT | ENBL
SET | RESET
GND | Q1
Q2 | GND
Q3 | Q4
R5
R6
R11
R12
R17
R18
R24
R23
J5
J7
Q1/A Q2/A Q3/A Q4/A
Enable/A Enable/B Fault_NI/A Fault_NI/B
Q1/C Q2/C Q3/C Q4/C
Enable/C Enable/D Fault_NI/C Fault_NI/D
P8(NI)
P10(NI)
P9(NI)
P11(NI)
Orient Fringed Side Here
Q1/B Q2/B Q3/B Q4/B
SET/A RESET/A SET/B RESET/B
Q1/D Q2/D Q3/D Q4/D
SET/C RESET/C SET/D RESET/D
C29C23
J1
P13(Contactors)
C30
COIL+/A
COIL+/B
COIL-/A
COIL-/B
Control/A
Control/B
GND
GND
Orient Fringed Side Here
C21
C22
U7
U9
L2
C5
R51
U10
C31
R44
R46
R50
R48
J6
R36R37
R35
R38
R34
R33
R32
R31
Vdc/D Vdc/C Vdc/B Vdc/A
P12(NI/Analog)
Orient Fringed Side Here
Analog Ground
U8
R42
R41R40
R39
R29
R30
INTERFACE UNIT
DESIGNER: Dr. Amirnaser Yazdani
Faraz Sadrzadeh
DRAWER: Faraz Sadrzadeh
DATE: AUGUST 2018

U4
C15
C8
C4
C10
L5
C16
F1
R9
R10
R8
R7
R21
R22
R20
R19
R15
R16
R14
R13
R27
R28
R26
R25
C18
C17
C19
C20
U6
U5
U11
D1
D2
R43
R45
U10
C21
C28
R53
Q1
R52
C22
C25
R47
R46
C24

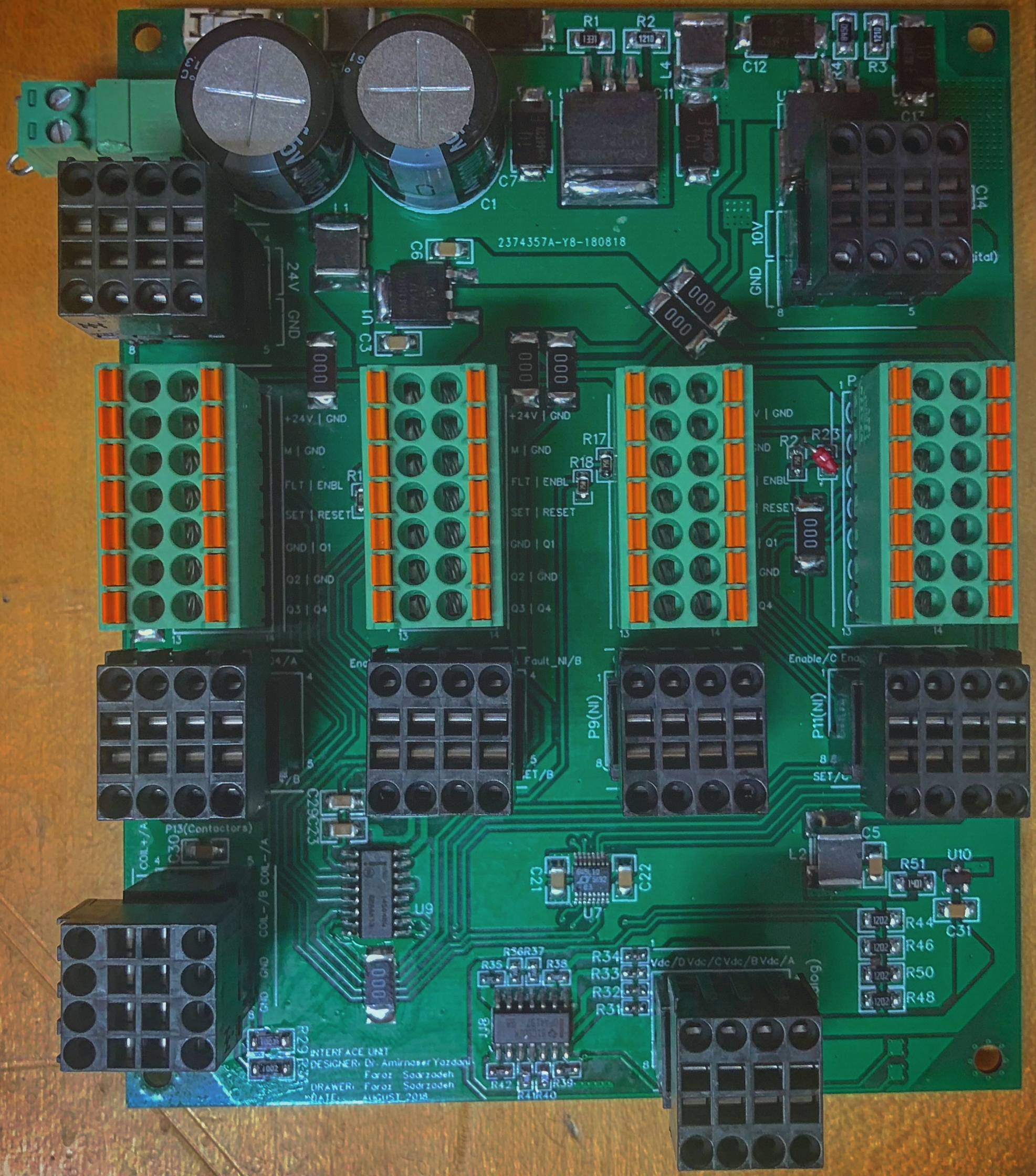
2374357A-Y8-180818
P13(Contactors)
P9(NI)
P11(NI)
INTERFACE UNIT
DESIGNER: Dr. Amirnaser Yazdani
Faroz Sadrzadeh
DRAWER: Faroz Sadrzadeh
DATE: AUGUST 2018