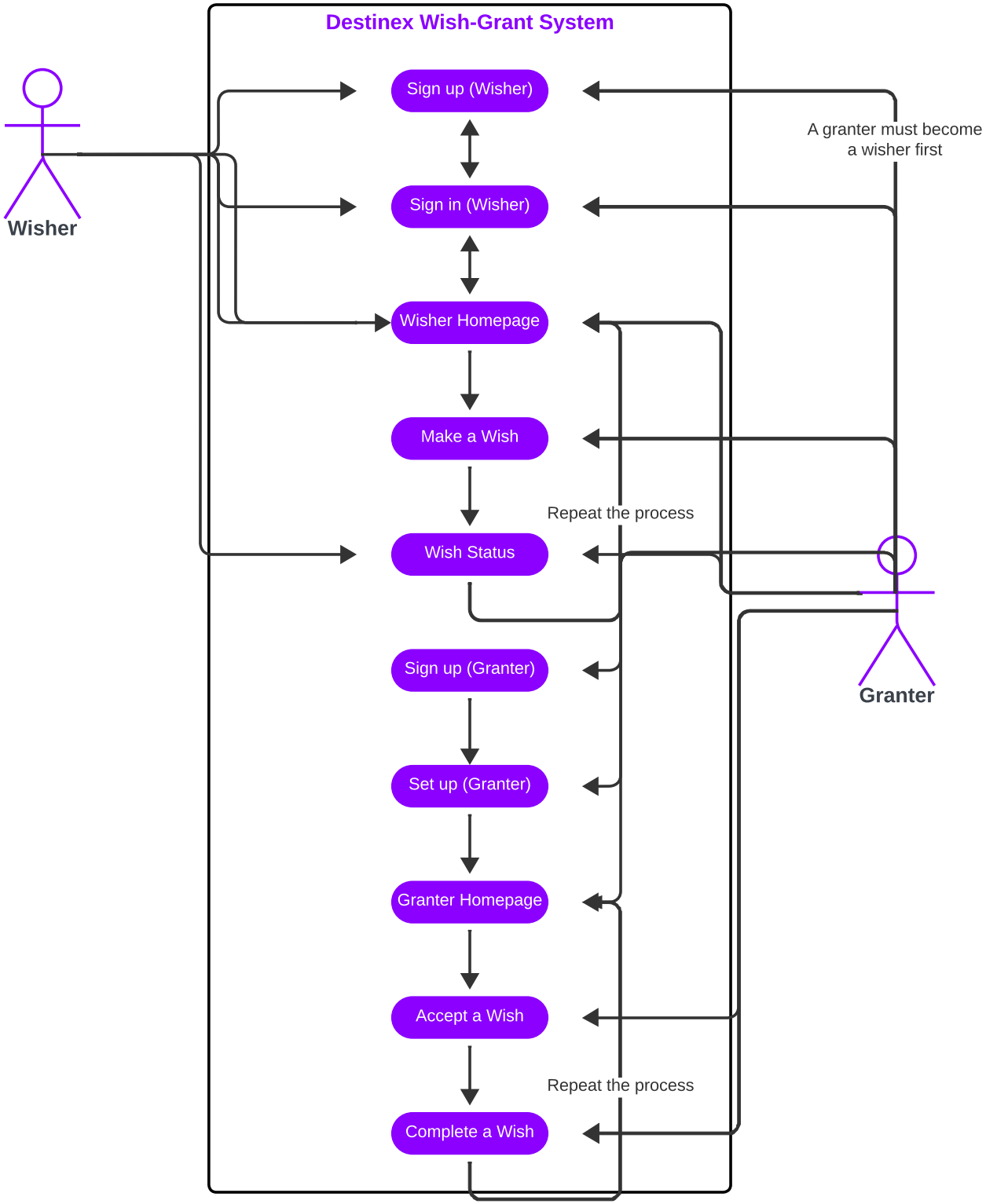
Destinex Wish-Grant System
Wisher
Sign up (Wisher)
Sign in (Wisher)
Wisher Homepage
Make a Wish
Wish Status
Sign up (Granter)
Set up (Granter)
Granter Homepage
Accept a Wish
Complete a Wish
A granter must become a wisher first
Repeat the process
Repeat the process
Granter