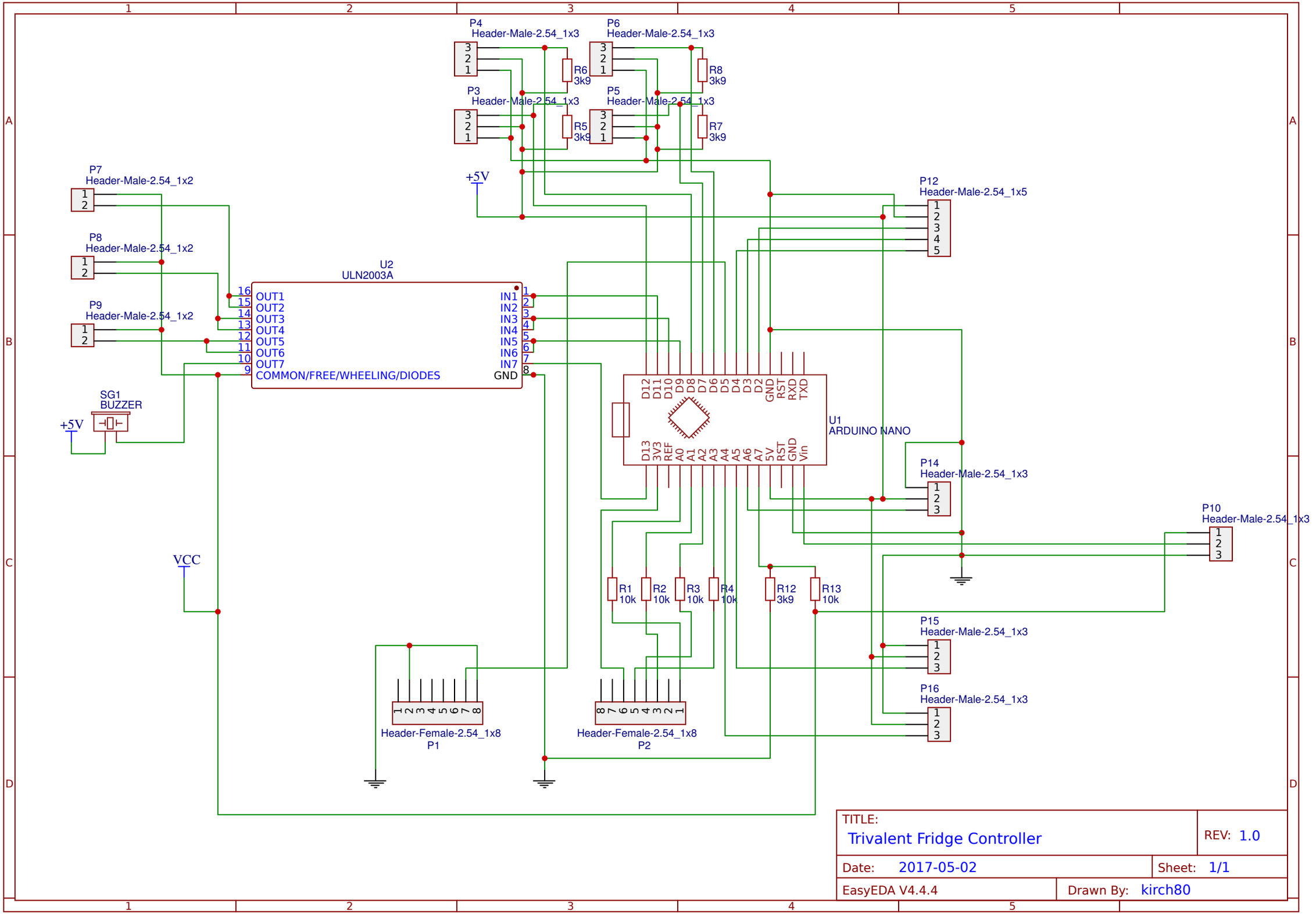

TITLE: Trivalent Fridge Controller	REV: 1.0
Date: 2017-05-02	Sheet: 1/1
EasyEDA V4.4.4	Drawn By: kirch80