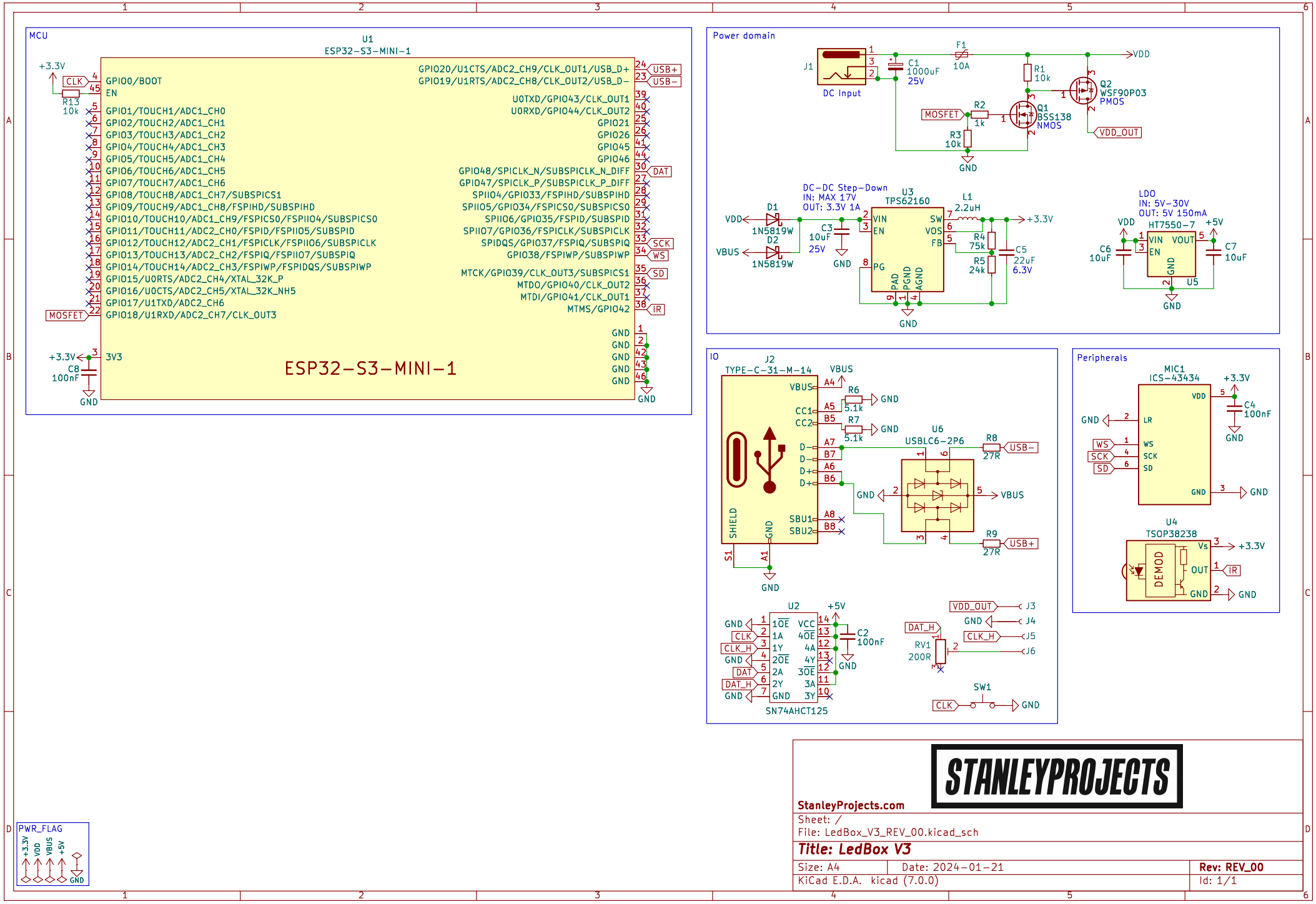
MCU
U1
ESP32-S3-MINI-1
ESP32-S3-MINI-1
+3.3V
CLK
R13
10k
MOSFET
+3.3V
C8
100nF
GND
3V3
GPIO0/BOOT
EN
GPIO1/TOUCH1/ADC1_CH0
GPIO2/TOUCH2/ADC1_CH1
GPIO3/TOUCH3/ADC1_CH2
GPIO4/TOUCH4/ADC1_CH3
GPIO5/TOUCH5/ADC1_CH4
GPIO6/TOUCH6/ADC1_CH5
GPIO7/TOUCH7/ADC1_CH6
GPIO8/TOUCH8/ADC1_CH7/SUBSPICS1
GPIO9/TOUCH9/ADC1_CH8/FSPIHD/SUBSPIHD
GPIO10/TOUCH10/ADC1_CH9/FSPICS0/FSPII04/SUBSPICS0
GPIO11/TOUCH11/ADC2_CH0/FSPID/FSPII05/SUBSPID
GPIO12/TOUCH12/ADC2_CH1/FSPICLK/FSPII06/SUBSPICLK
GPIO13/TOUCH13/ADC2_CH2/FSPIQ/FSPII07/SUBSPIQ
GPIO14/TOUCH14/ADC2_CH3/FSPIWP/FSPIDQS/SUBSPIWP
GPIO15/U0RTS/ADC2_CH4/XTAL_32K_P
GPIO16/U0CTS/ADC2_CH5/XTAL_32K_NH5
GPIO17/U1TXD/ADC2_CH6
GPIO18/U1RXD/ADC2_CH7/CLK_OUT3
GPIO20/U1CTS/ADC2_CH9/CLK_OUT1/USB_D+
GPIO19/U1RTS/ADC2_CH8/CLK_OUT2/USB_D-
U0TXD/GPIO43/CLK_OUT1
U0RXD/GPIO44/CLK_OUT2
GPIO21
GPIO26
GPIO45
GPIO46
GPIO48/SPICLK_N/SUBSPICLK_N_DIFF
GPIO47/SPICLK_P/SUBSPICLK_P_DIFF
SPII04/GPIO33/FSPIHD/SUBSPIHD
SPII05/GPIO34/FSPICS0/SUBSPICS0
SPII06/GPIO35/FSPID/SUBSPID
SPII07/GPIO36/FSPICLK/SUBSPICLK
SPIDQS/GPIO37/FSPIQ/SUBSPIQ
GPIO38/FSPIWP/SUBSPIWP
MTCK/GPIO39/CLK_OUT3/SUBSPICS1
MTDO/GPIO40/CLK_OUT2
MTDI/GPIO41/CLK_OUT1
MTMS/GPIO42
USB+
USB-
DAT
SCK
WS
SD
IR
GND
Power domain
J1
DC Input
C1
1000uF
25V
F1
10A
VDD
R1
10k
Q2
WSF90P03
PMOS
MOSFET
R2
1k
Q1
BSS138
NMOS
R3
10k
VDD_OUT
GND
DC-DC Step-Down
IN: MAX 17V
OUT: 3.3V 1A
U3
TPS62160
D1
1N5819W
D2
1N5819W
VDD
VBUS
C3
10uF
25V
VIN
EN
SW
VOS
FB
PG
PAD
PGND
AGND
L1
2.2uH
+3.3V
R4
75k
R5
24k
C5
22uF
6.3V
LDO
IN: 5V-30V
OUT: 5V 150mA
HT7550-7
VIN
VOUT
EN
GND
C6
10uF
C7
10uF
+5V
U5
IO
J2
TYPE-C-31-M-14
VBUS
CC1
CC2
D-
D+
SBU1
SBU2
SHIELD
R6
5.1k
R7
5.1k
U6
USBLC6-2P6
R8
27R
R9
27R
USB-
USB+
S1
A1
U2
SN74AHCT125
+5V
C2
100nF
1OE
1A
1Y
2OE
2A
2Y
VCC
4OE
4A
4Y
3OE
3A
3Y
DAT_H
RV1
200R
J3
J4
J5
J6
CLK_H
SW1
Peripherals
MIC1
ICS-43434
LR
WS
SCK
SD
C4
100nF
U4
TSOP38238
DEMOD
Vs
OUT
PWR_FLAG
+3.3V
VDD
VBUS
+5V
GND
STANLEYPROJECTS
StanleyProjects.com
Sheet: /
File: LedBox_V3_REV_00.kicad_sch
Title: LedBox V3
Size: A4
Date: 2024-01-21
Rev: REV_00
KiCad E.D.A. kicad (7.0.0)
Id: 1/1