Power In

5V to 3V3 LDO

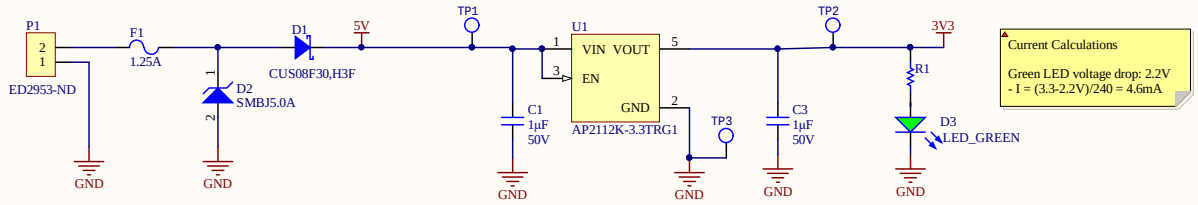

Current Calculations

Green LED voltage drop: 2.2V
- I = (3.3-2.2V)/240 = 4.6mA

Title: Power		
Project: Robot Controller.PrjPcb		
Rev: 1	Checker: Lance Bantoto	
	Engineer: Christopher Arjune	
Date: 2021-01-03	Sheet: 1 of 6	

UW ROBOTICS TEAM

RGB LED

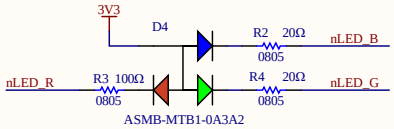

Current Calculations

RGB LED voltage drops:
- Red: 2.1V: I = (3.3-2.1V)/100 = 12mA
- Blue: 3.1V: I = (3.3-3.1V)/20 = 10mA
- Green: 3.1V: I = (3.3-3.1V)/20 = 10mA

Decoupling Caps

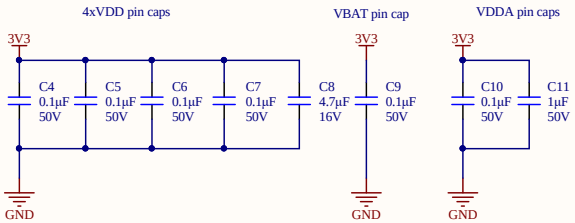

STM32F446RET6

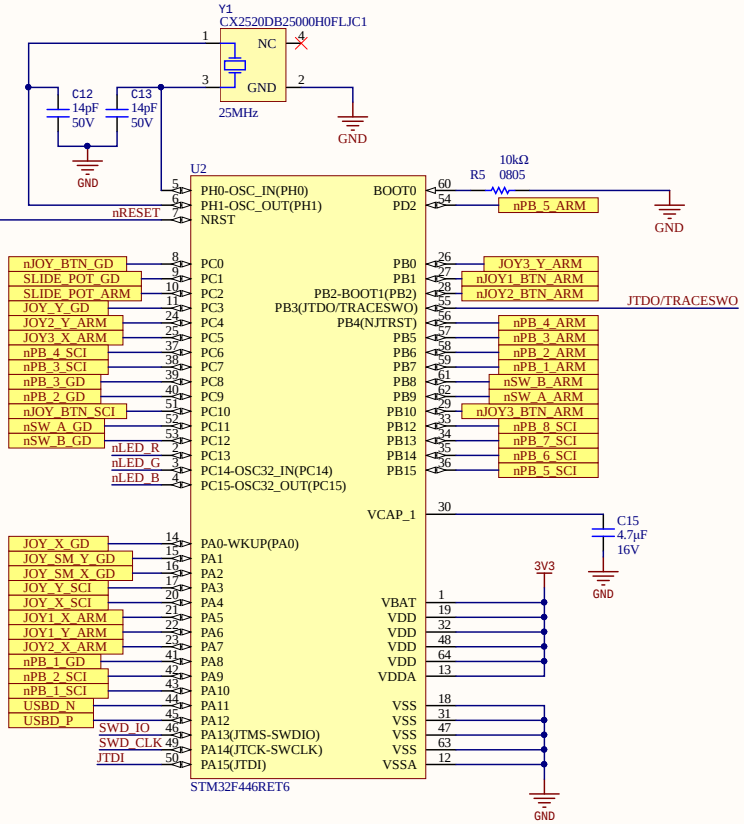

Reset Button

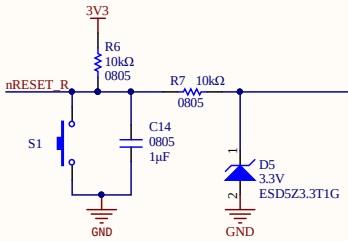

For Debounce Circuit:

T=RC -> C= T/R
C= 10ms/10kOhms= 1uF

Debug/Programming

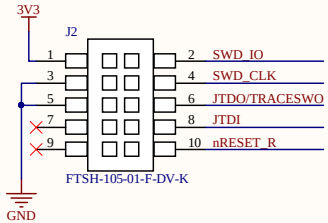

Title: Microcontroller		
Project: Robot Controller.PrjPcb		
Rev: 1	Checker: Lance Bantoto	
	Engineer: Christopher Arjune	
Date: 2021-01-03	Sheet: 2 of 6	

UW ROBOTICS TEAM

USB Connector

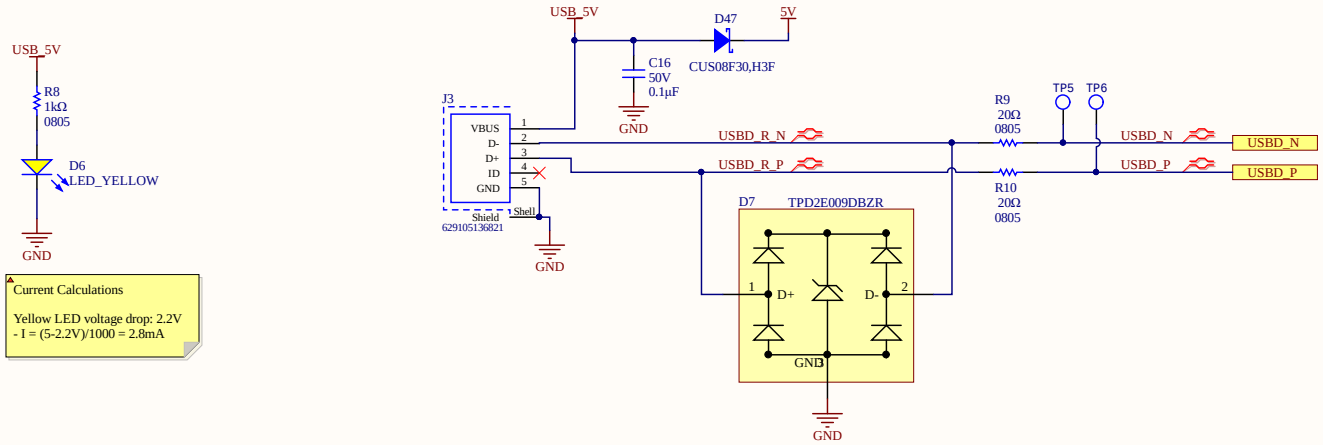

Title: USB		
Project: Robot Controller.PrjPcb		
Rev: 1	Checker: Lance Bantoto	
	Engineer: Christopher Arjune	
Date: 2021-01-03	Sheet: 3 of 6	

UW ROBOTICS TEAM

Slide Potentiometer

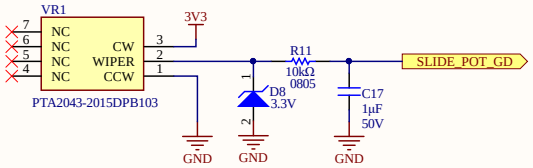

For Debounce Circuits:

T=RC -> C= T/R
C= 10ms/10kOhms= 1uF

2-Axis Joysticks

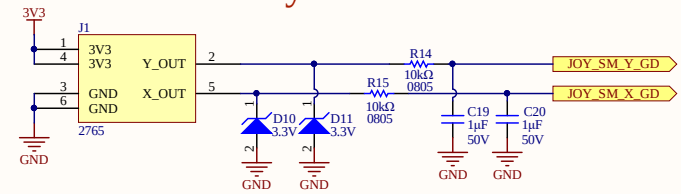

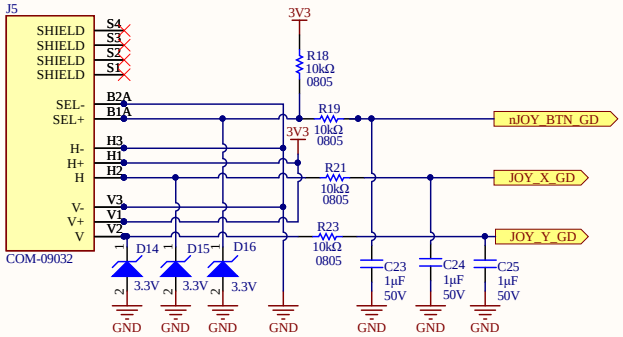

Controls (subject to change)

Joysticks:
- 1: Large joystick is used for driving
- 2: Small joystick is used for gimbal

Potentiometer:
- Used for driving speed control

Switch:
- Used for reverse-mode toggle

Buttons:
- 1: Full-stop (halt all movement immediately)
- 2-3: Extra, in case additional functionality is requested

SPDT Switch

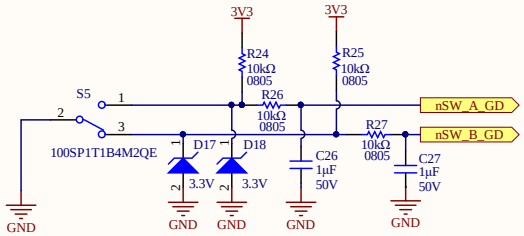

Pushbuttons

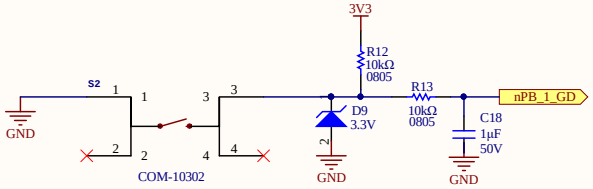

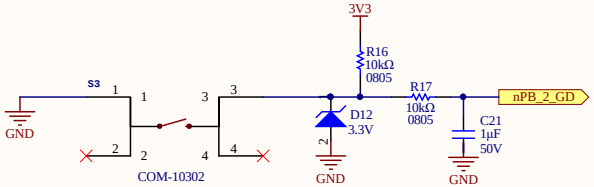

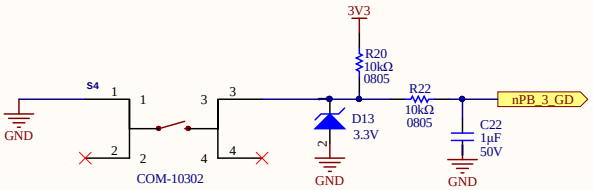

Title: GimbDrive Controls		
Project: Robot Controller.PrjPcb		
Rev: 1	Checker: Lance Bantoto	
	Engineer: Christopher Arjune	
Date: 2021-01-03	Sheet: 4 of 6	

UW ROBOTICS TEAM

2-Axis Joysticks

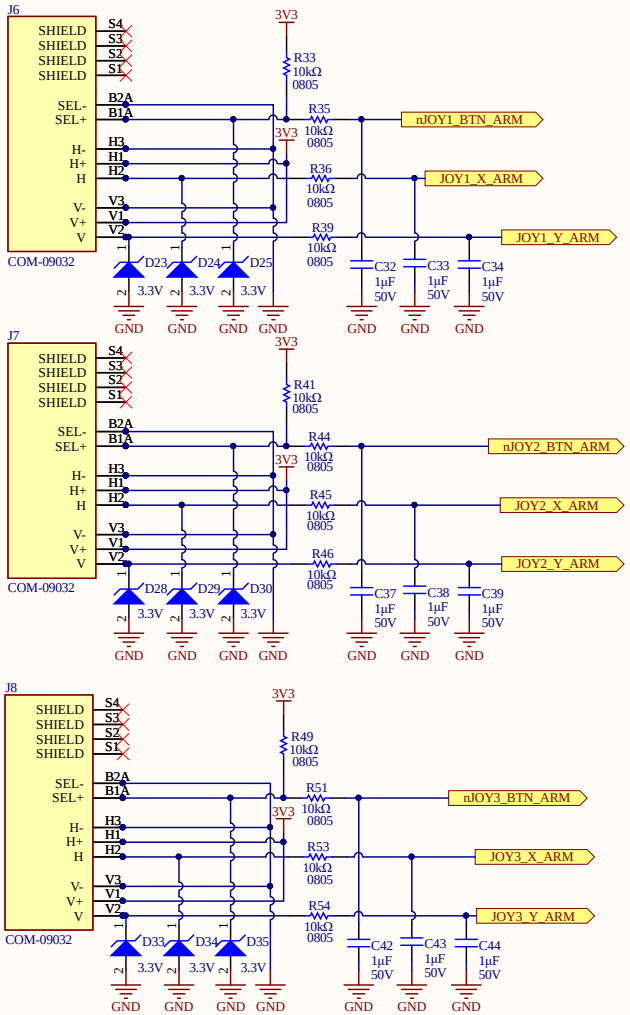

SPDT Switch

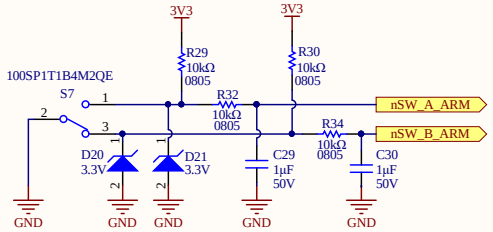

Slide Potentiometer

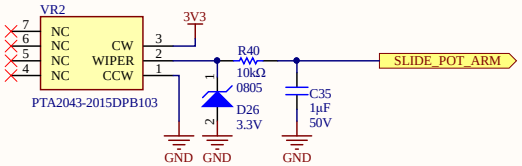

For Debounce Circuits:

T=RC -> C= T/R
C= 10ms/10kOhms= 1uF

Controls

Joysticks: (in joint-control mode)
- 1: Up/Down is for shoulder, Left/Right is for turntable
- 2: Up/Down is for elbow
- 3: Up/Down is for wrist pitch, Left/Right is for wrist roll

Switch:
- Used to toggle between joint-control and inverse-kinematics

Potentiometer:
- Used to adjust movement speed of joints/arm (depending on control mode)

Buttons:
- 1/2: Open/close claw
- 3/4: Set/Go to home position
- 5: Extra, in case extra functionality is requested later

Pushbuttons

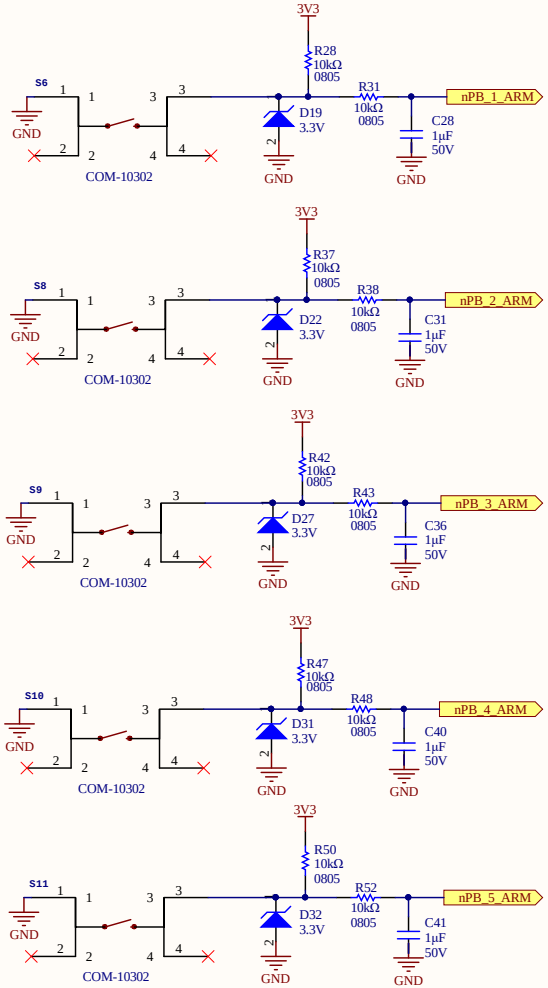

Title: Arm Controls		
Project: Robot Controller.PrjPcb		
Rev: 1	Checker: Lance Bantoto	
	Engineer: Christopher Arjune	
Date: 2021-01-03	Sheet: 5 of 6	

UW ROBOTICS TEAM

Pushbuttons

For Debounce Circuits:

T=RC -> C= T/R
C= 10ms/10kOhms= 1uF

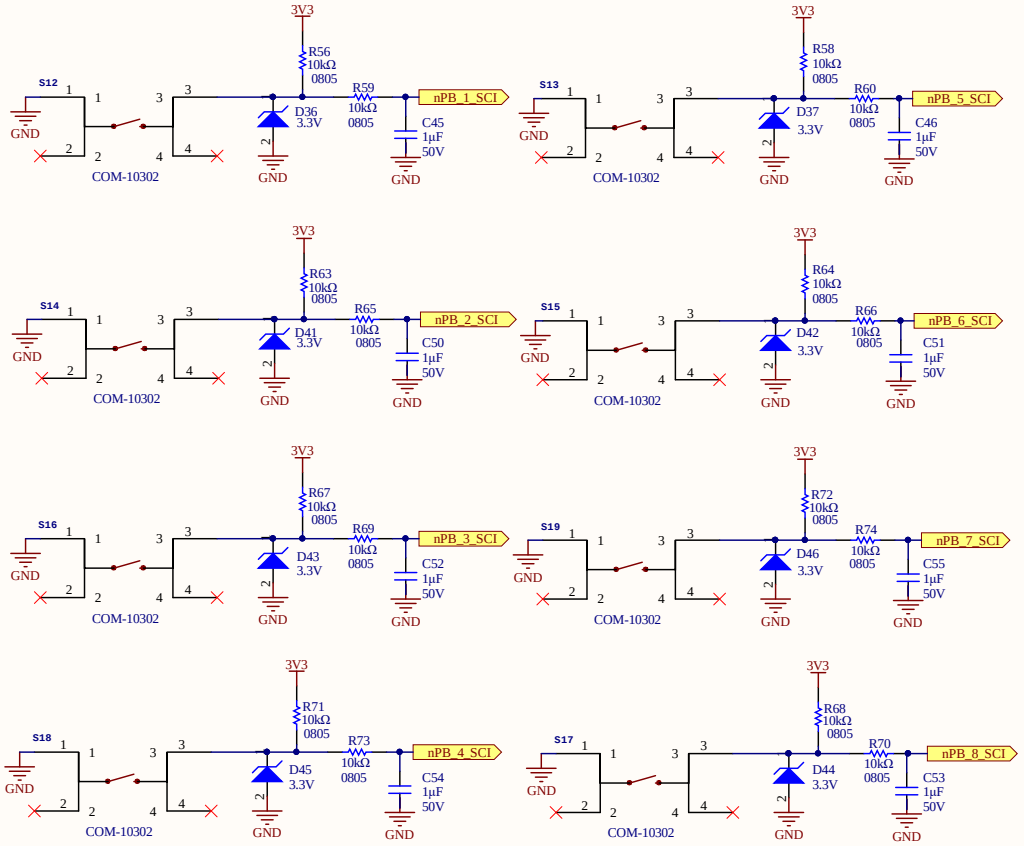

2-Axis Joystick

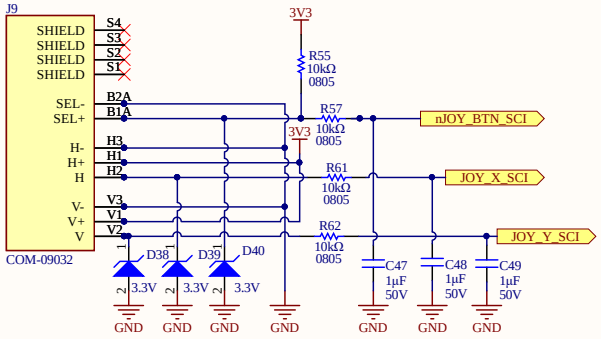

Controls

Joystick:
- Up/Down is for elevator, Left/Right is for opening/closing shovel
- Button should be used to choose between L/R and U/D, since the science mechanism may be damaged if too many things are moving at once

Buttons:
- 1/2: Move left/right 1 index
- 3/4: Move to leftmost/rightmost index
- 5/6: Open/close lid
- 7: Pre-programmed mixing sequence
- 8: Extra, in case additional functionality is requested later

Title: Science Controls		
Project: Robot Controller.PrjPcb		
Rev: 1	Checker: Lance Bantoto	
	Engineer: Christopher Arjune	
Date: 2021-01-03	Sheet: 6 of 6	

UW ROBOTICS TEAM

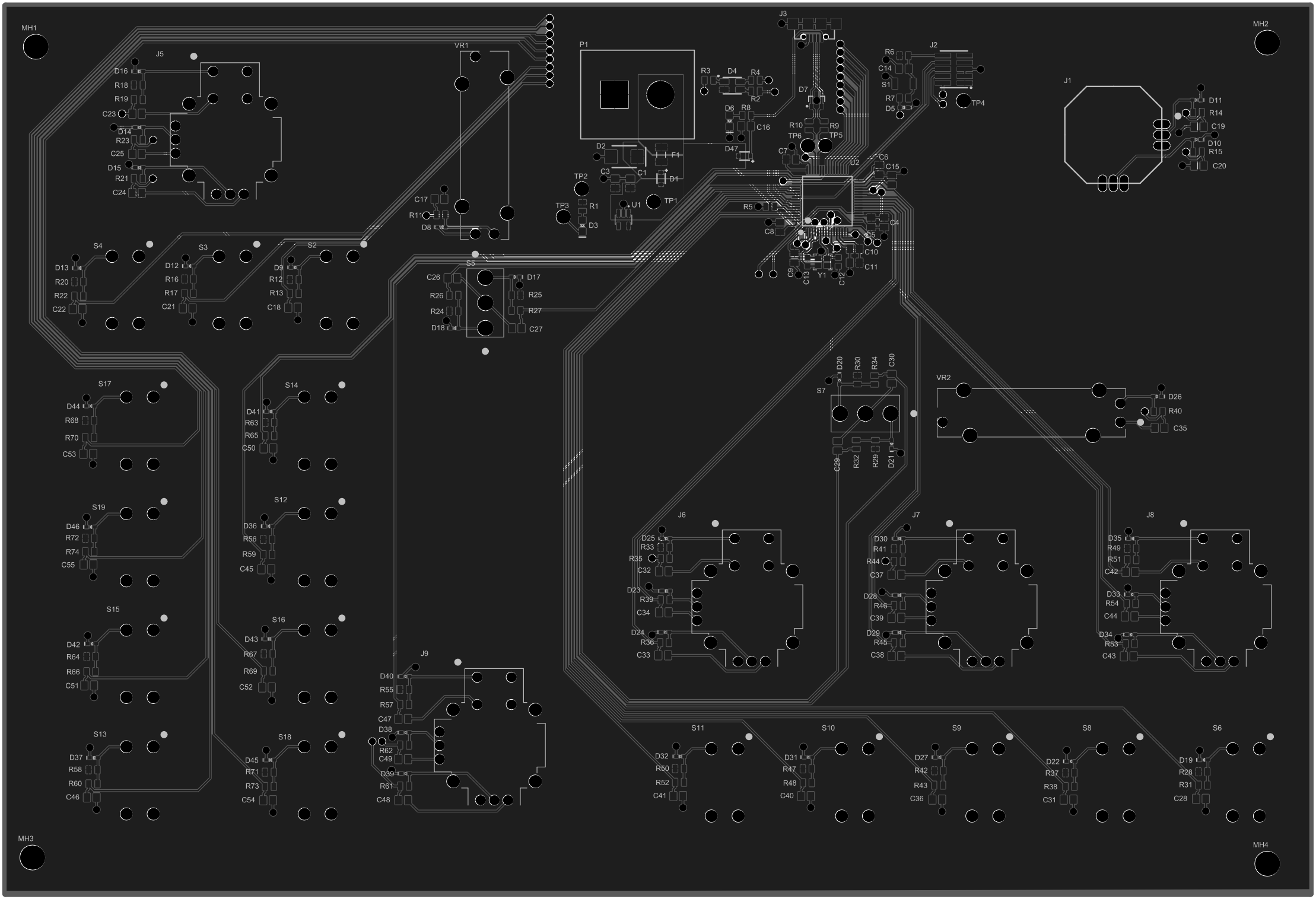
MH1
MH2
MH3
MH4
J5
D16
R18
R19
C23
D14
R23
C25
D15
R21
C24
VR1
C17
R11
D8
P1
J3
R3
D4
R4
R2
D6
R8
C16
D47
D7
R10
R9
TP6
TP5
C7
U2
C6
C15
R6
C14
S1
R7
D5
J2
TP4
J1
D11
R14
C19
D10
R15
C20
D2
F1
C3
C1
D1
TP2
TP3
R1
D3
U1
TP1
R5
C8
C4
C5
C10
C11
C9
C13
Y1
C12
S4
D13
R20
R22
C22
S3
D12
R16
R17
C21
S2
D9
R12
R13
C18
S5
C26
R26
R24
D18
D17
R25
R27
C27
S7
D20
R30
R34
C30
C29
R32
R29
D21
VR2
D26
R40
C35
S17
D44
R68
R70
C53
S14
D41
R63
R65
C50
S19
D46
R72
R74
C55
S12
D36
R56
R59
C45
S15
D42
R64
R66
C51
S16
D43
R67
R69
C52
S13
D37
R58
R60
C46
S18
D45
R71
R73
C54
J9
D40
R55
R57
C47
D38
R62
C49
D39
R61
C48
J6
D25
R33
R35
C32
D23
R39
C34
D24
R36
C33
J7
D30
R41
R44
C37
D28
R46
C39
D29
R45
C38
J8
D35
R49
R51
C42
D33
R54
C44
D34
R53
C43
S11
D32
R50
R52
C41
S10
D31
R47
R48
C40
S9
D27
R42
R43
C36
S8
D22
R37
R38
C31
S6
D19
R28
R31
C28