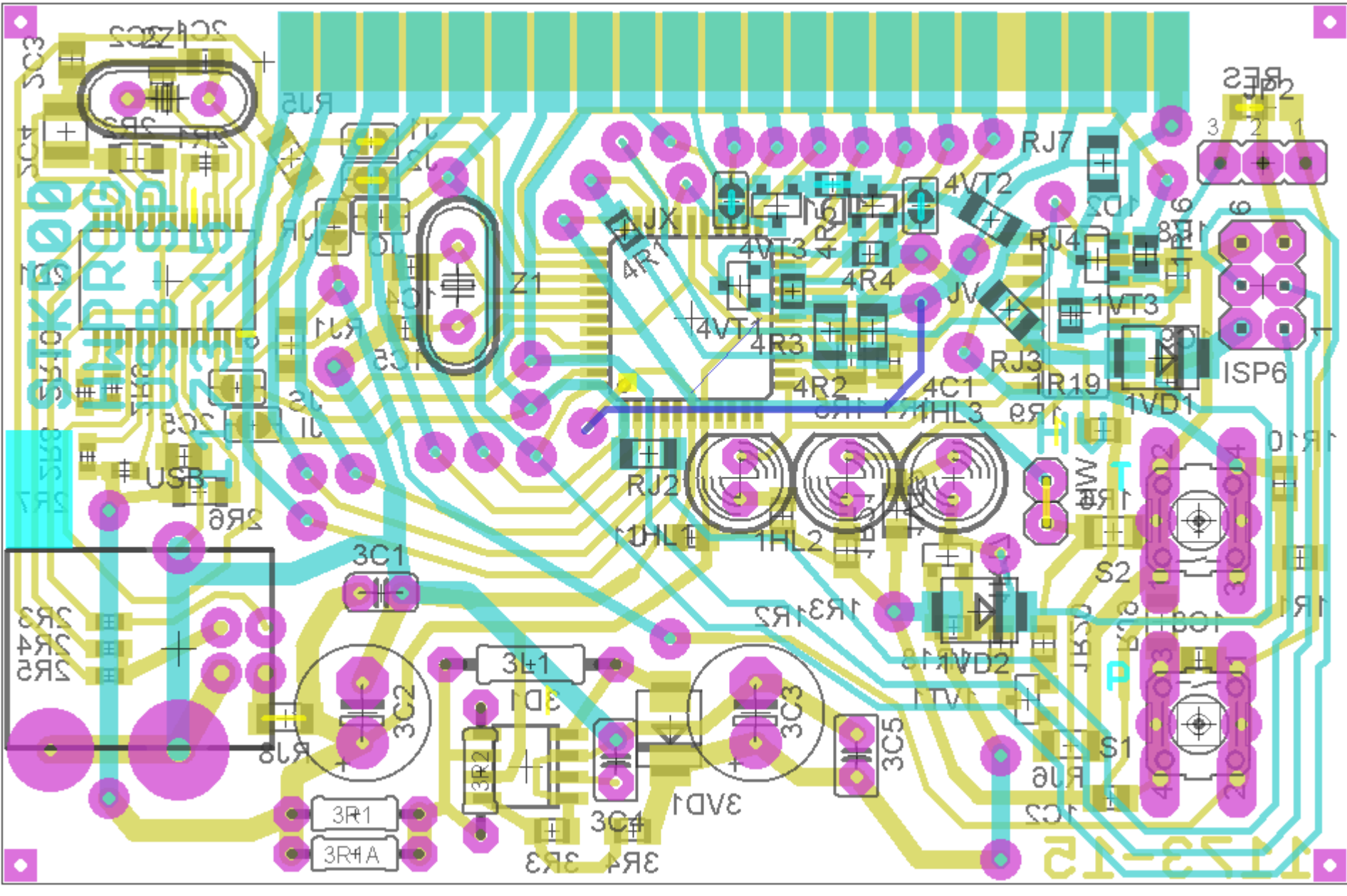
STK00
EMPROG
USB-
L7231
Z1
USB
3C1
3L1
3C2
3C3
3C4
3C5
3R1
3R4A
3R2
3VD1
3D1
4VT1
4VT2
4VT3
4R1
4R2
4R3
4R4
4C1
1HL1
1HL2
1HL3
RJ2
RJ3
RJ4
RJ7
JX
JV
1VT3
1R19
1VD1
1VD2
ISP6
JP2
S1
S2
H
T
P

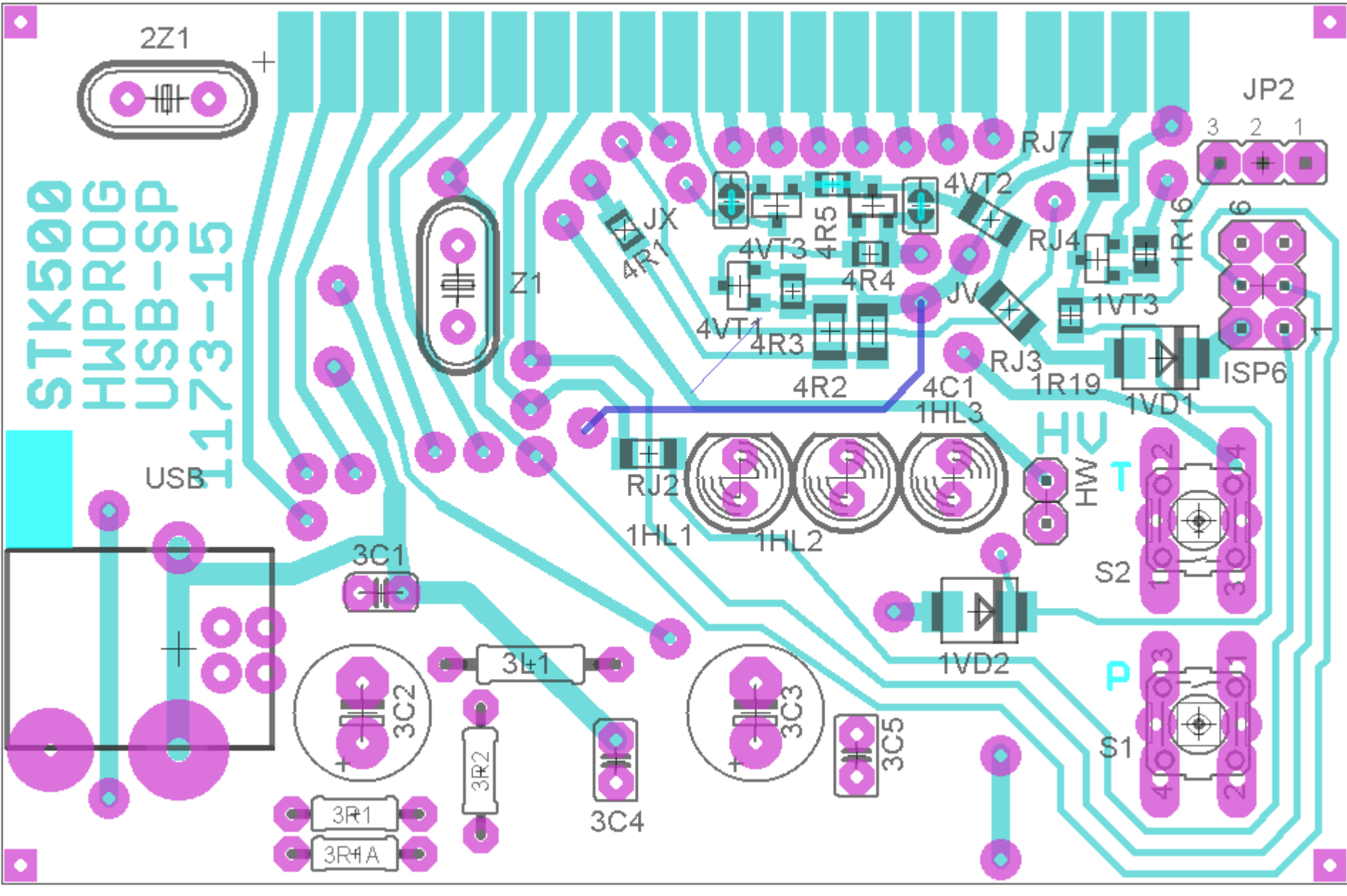
STK500
HWPROG
USB-SP
1173-15
2Z1
JP2
3 2 1
RJ7
4VT2
JX
4R5
4R1
4VT3
4R4
RJ4
1R16
Z1
JV
1VT3
4VT1
4R3
RJ3
1R19
ISP6
4R2
4C1
1HL3
1VD1
HV
HW
T
USB
RJ2
1HL1
1HL2
S2
3C1
1VD2
P
3L1
3C2
3C3
3C5
S1
3R2
3C4
3R1
3R4A

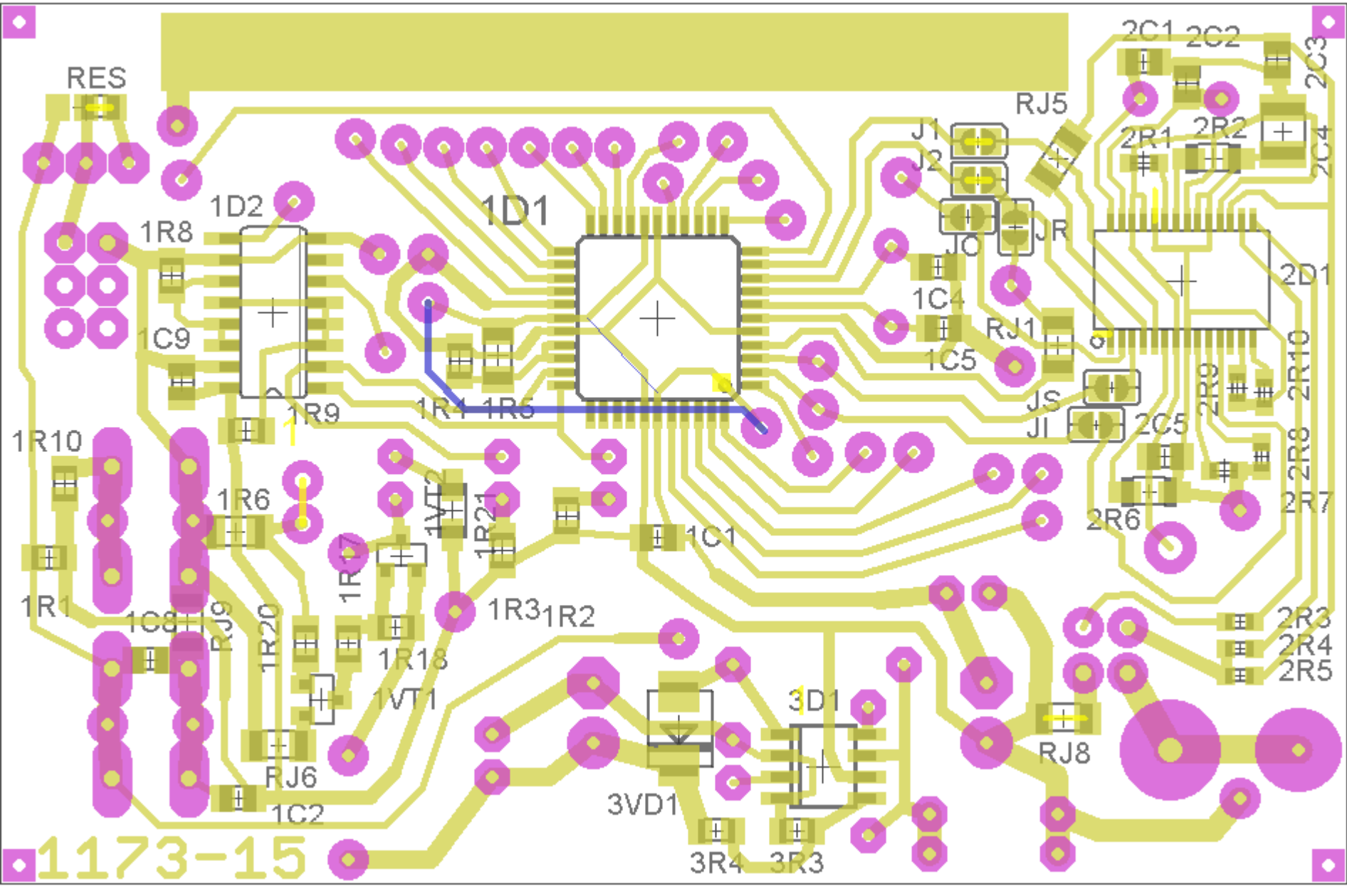
RES
1D2
1R8
1C9
1D1
1R9
1R4
1R5
1R10
1R6
1VT2
1R21
1C1
1R1
1C8
RJ9
1R20
1R17
1R3
1R2
1R18
1VT1
RJ6
1C2
3VD1
3D1
3R4
3R3
RJ8
2C1
2C2
2C3
2C4
RJ5
J1
J2
2R1
2R2
JC
JR
1C4
1C5
RJ1
2D1
JS
JI
2C5
2R9
2R10
2R8
2R7
2R6
2R3
2R4
2R5
1173-15