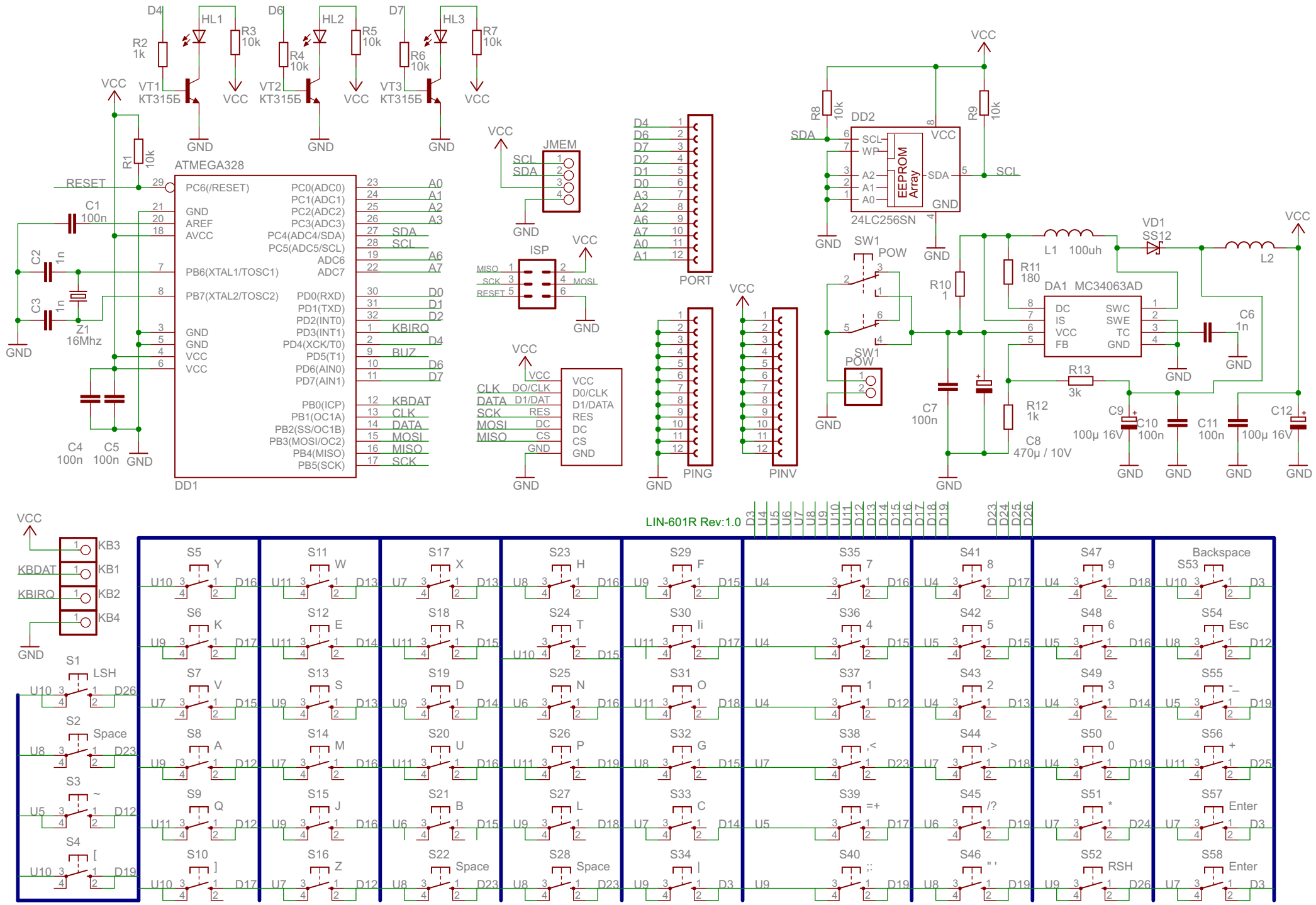
ATMEGA328
DD1
PC6(/RESET)
PC0(ADC0)
PC1(ADC1)
PC2(ADC2)
PC3(ADC3)
PC4(ADC4/SDA)
PC5(ADC5/SCL)
ADC6
ADC7
PB6(XTAL1/TOSC1)
PB7(XTAL2/TOSC2)
PD0(RXD)
PD1(TXD)
PD2(INT0)
PD3(INT1)
PD4(XCK/T0)
PD5(T1)
PD6(AIN0)
PD7(AIN1)
PB0(ICP)
PB1(OC1A)
PB2(SS/OC1B)
PB3(MOSI/OC2)
PB4(MISO)
PB5(SCK)
GND
AREF
AVCC
VCC
RESET
C1 100n
C2 1n
C3 1n
Z1 16Mhz
C4 100n
C5 100n
R1 10k
R2 1k
R3 10k
R4 10k
R5 10k
R6 10k
R7 10k
R8 10k
R9 10k
R10 1
R11 180
R12 1k
R13 3k
HL1
HL2
HL3
VT1 КТ315Б
VT2 КТ315Б
VT3 КТ315Б
D4
D6
D7
A0
A1
A2
A3
A6
A7
D0
D1
D2
D4
D6
D7
KBIRQ
BUZ
KBDAT
CLK
DATA
MOSI
MISO
SCK
SDA
SCL
JMEM
ISP
MISO
SCK
RESET
MOSI
CLK
DATA
SCK
MOSI
MISO
DO/CLK
D1/DAT
RES
DC
CS
D0/CLK
D1/DATA
PORT
PING
PINV
DD2
24LC256SN
EEPROM Array
SCL
WP
A2
A1
A0
SDA
SW1 POW
L1 100uh
L2
VD1 SS12
DA1 MC34063AD
DC
IS
VCC
FB
SWC
SWE
TC
GND
C6 1n
C7 100n
C8 470µ / 10V
C9 100µ 16V
C10 100n
C11 100n
C12 100µ 16V
KB3
KB1
KB2
KB4
KBDAT
KBIRQ
LIN-601R Rev:1.0
S1 LSH
S2 Space
S3 ~
S4 [
S5 Y
S6 K
S7 V
S8 A
S9 Q
S10]
S11 W
S12 E
S13 S
S14 M
S15 J
S16 Z
S17 X
S18 R
S19 D
S20 U
S21 B
S22 Space
S23 H
S24 T
S25 N
S26 P
S27 L
S28 Space
S29 F
S30 Ii
S31 O
S32 G
S33 C
S34 |
S35 7
S36 4
S37 1
S38 ,<
S39 =+
S40 ;:
S41 8
S42 5
S43 2
S44 .>
S45 /?
S46 " '
S47 9
S48 6
S49 3
S50 0
S51 *
S52 RSH
S53 Backspace
S54 Esc
S55 -_
S56 +
S57 Enter
S58 Enter