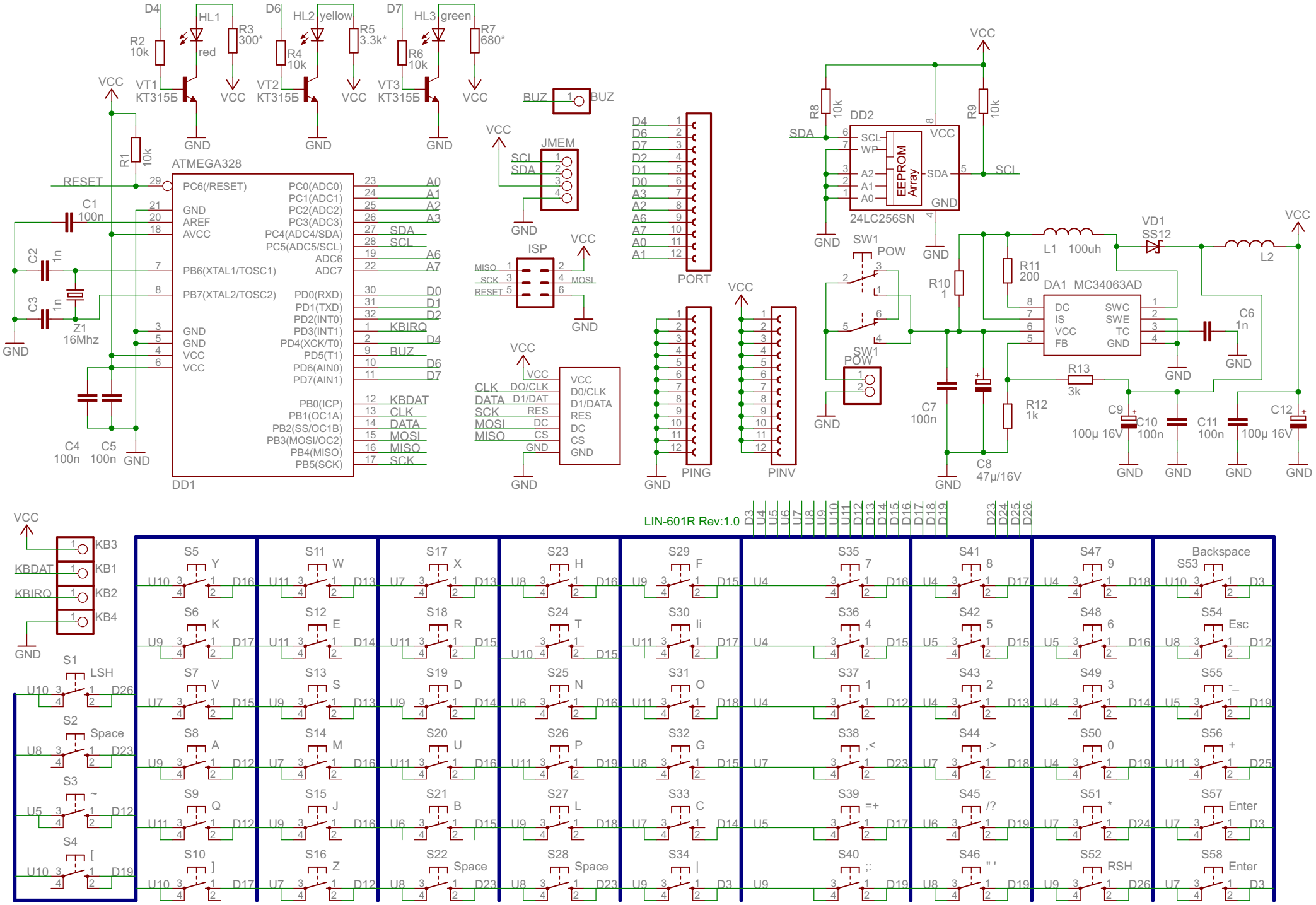
LIN-601R Rev:1.0
ATMEGA328
DD1
PC6(/RESET)
PC0(ADC0)
PC1(ADC1)
PC2(ADC2)
PC3(ADC3)
PC4(ADC4/SDA)
PC5(ADC5/SCL)
ADC6
ADC7
PB6(XTAL1/TOSC1)
PB7(XTAL2/TOSC2)
PD0(RXD)
PD1(TXD)
PD2(INT0)
PD3(INT1)
PD4(XCK/T0)
PD5(T1)
PD6(AIN0)
PD7(AIN1)
PB0(ICP)
PB1(OC1A)
PB2(SS/OC1B)
PB3(MOSI/OC2)
PB4(MISO)
PB5(SCK)
HL1 red
HL2 yellow
HL3 green
VT1 КТ315Б
VT2 КТ315Б
VT3 КТ315Б
JMEM
ISP
PORT
PING
PINV
DD2
24LC256SN
EEPROM Array
DA1 MC34063AD
VD1 SS12
L1 100uh
L2
Z1 16Mhz
KB1
KB2
KB3
KB4
KBDAT
KBIRQ
Backspace
Esc
Enter
RSH
LSH
Space