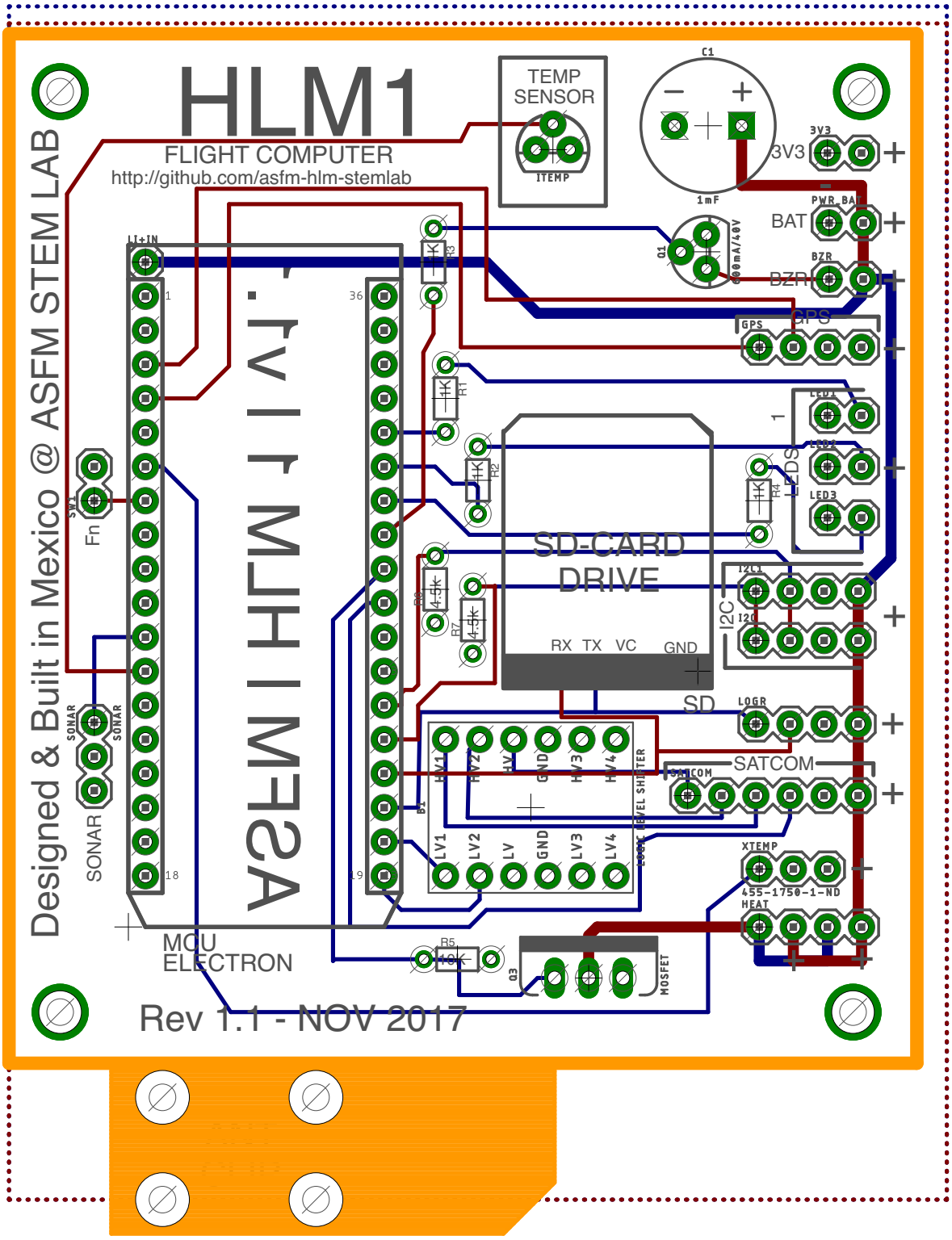
HLM1
FLIGHT COMPUTER
http://github.com/asfm-hlm-stemlab
Designed & Built in Mexico @ ASFM STEM LAB
ASFM HLM 1.1
TEMP SENSOR
ITEMP
C1
1mF
Q1
600mA/40V
3V3
PWR_BAT
BAT
BZR
GPS
LED1
LED2
LED3
LEDS
SD-CARD DRIVE
RX TX VC GND
SD
I2C1
I2C
LOGR
SATCOM
XTEMP
455-1750-1-ND
HEAT
MOSFET
LOGIC LEVEL SHIFTER
HV1 HV2 HV GND HV3 HV4
LV1 LV2 LV GND LV3 LV4
SW1
Fn
SONAR
MCU
ELECTRON
Rev 1.1 - NOV 2017