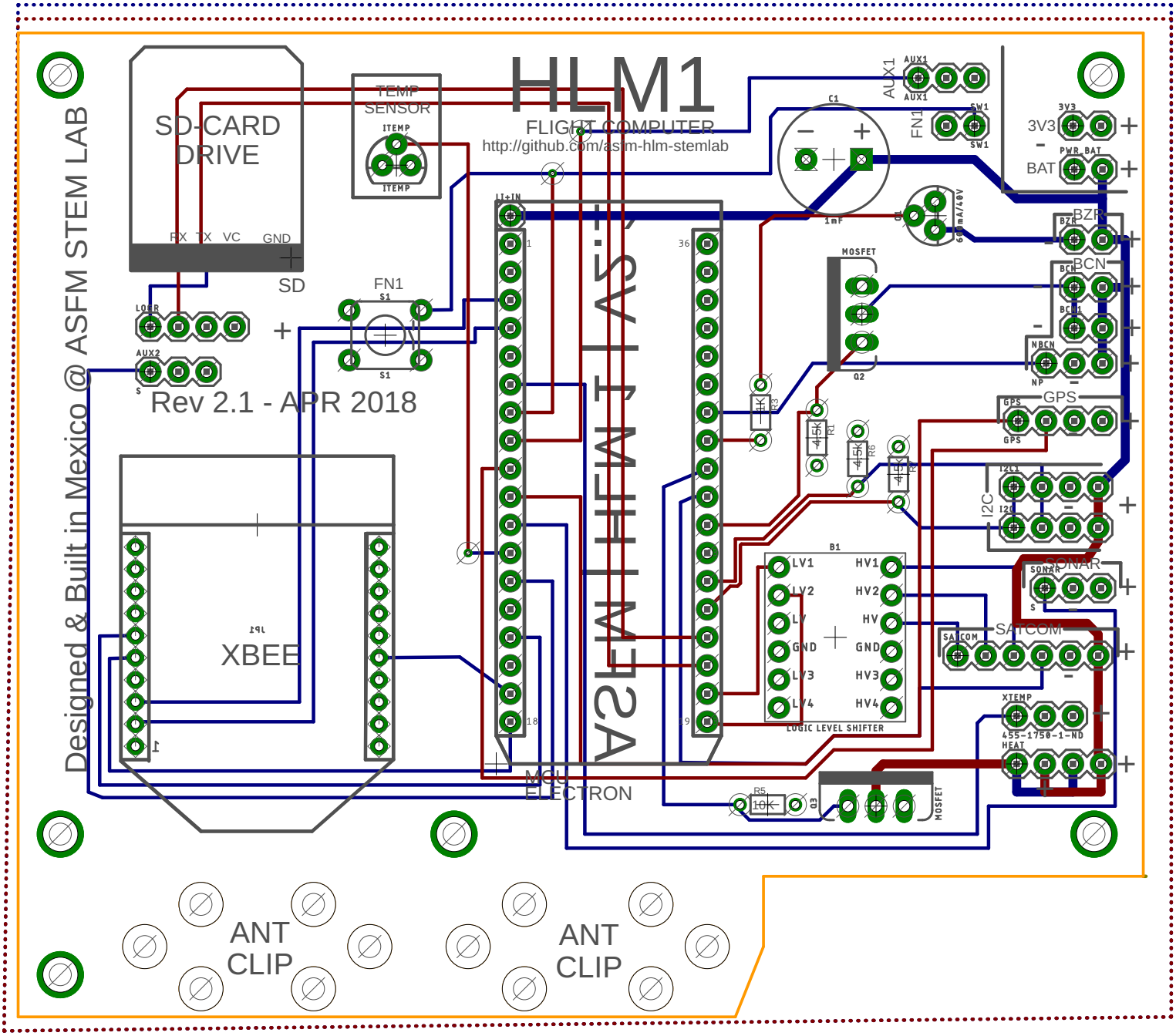
HLM1
FLIGHT COMPUTER
http://github.com/asfm-hlm-stemlab
Designed & Built in Mexico @ ASFM STEM LAB
Rev 2.1 - APR 2018
SD-CARD DRIVE
RX TX VC GND
SD
TEMP SENSOR
ITEMP
FN1
S1
AUX1
AUX2
LOGR
XBEE
MGU ELECTRON
LI+IN
C1
1mF
MOSFET
Q2
Q3
B1
LOGIC LEVEL SHIFTER
LV1
LV2
LV
GND
LV3
LV4
HV1
HV2
HV
GND
HV3
HV4
R1
R2
R3
R5
10K
3V3
BAT
PWR_BAT
BZR
BCN
NBCN
NP
GPS
I2C
SONAR
SATCOM
XTEMP
455-1750-1-ND
HEAT
ANT CLIP
ANT CLIP