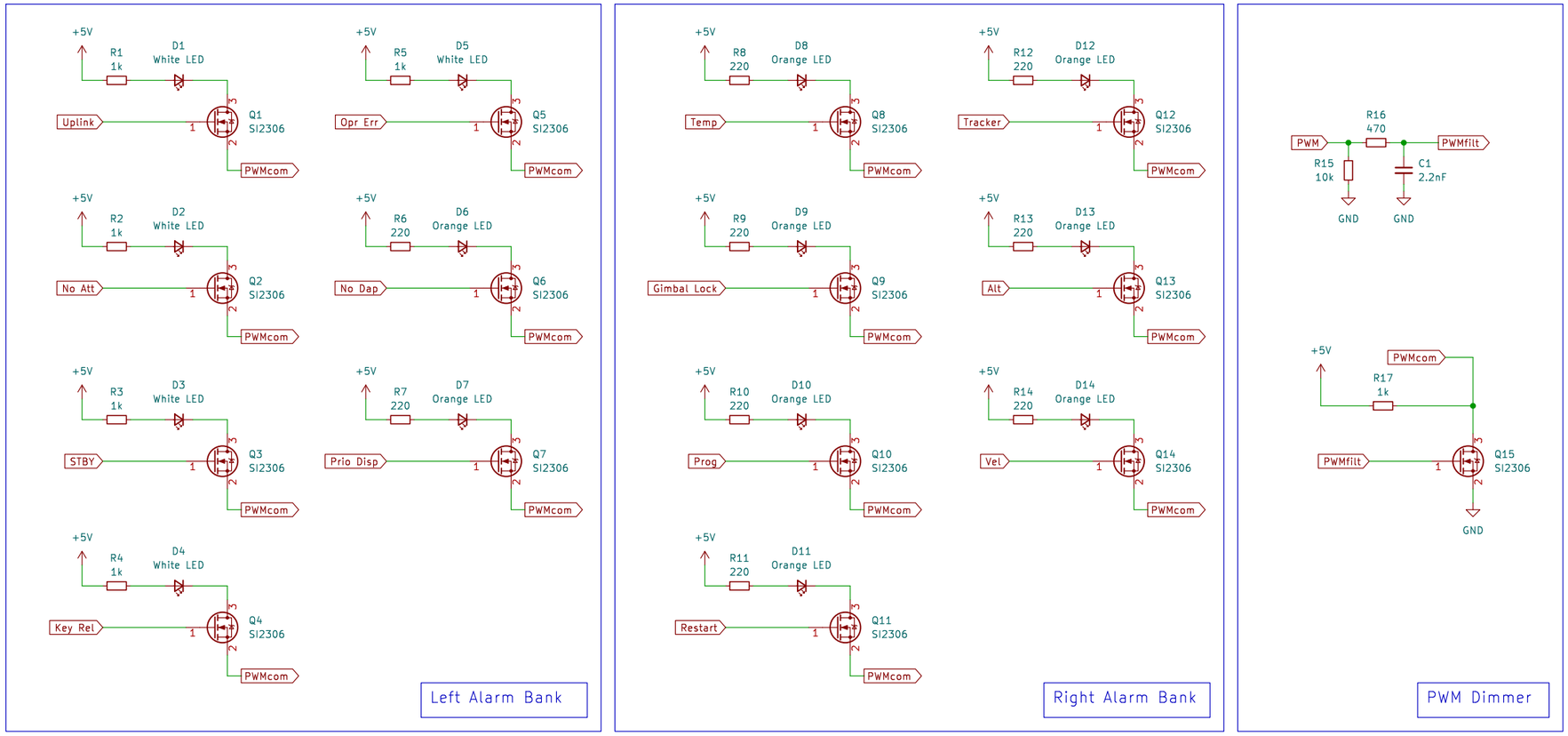

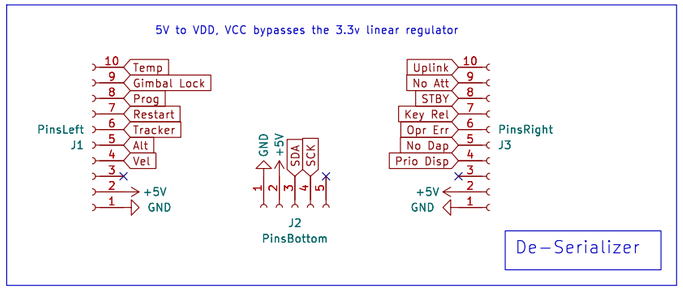

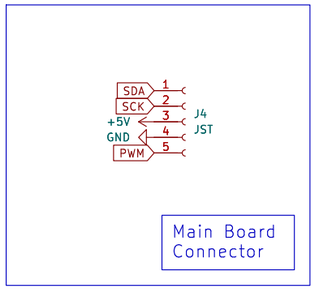

Pablo Ortiz López, Evan MacDonald

Sheet: /
File: Alarm_lights.kicad_sch

Title: DSKY Alarm Lights

Size: A3	Date: 2024-03-13	**Rev: 0.3.1**
KiCad E.D.A. kicad 7.0.10		Id: 1/1