Reverse polarity and overvoltage protection up to 20V

UVLO = 4.754V

OVLO = 5.329V

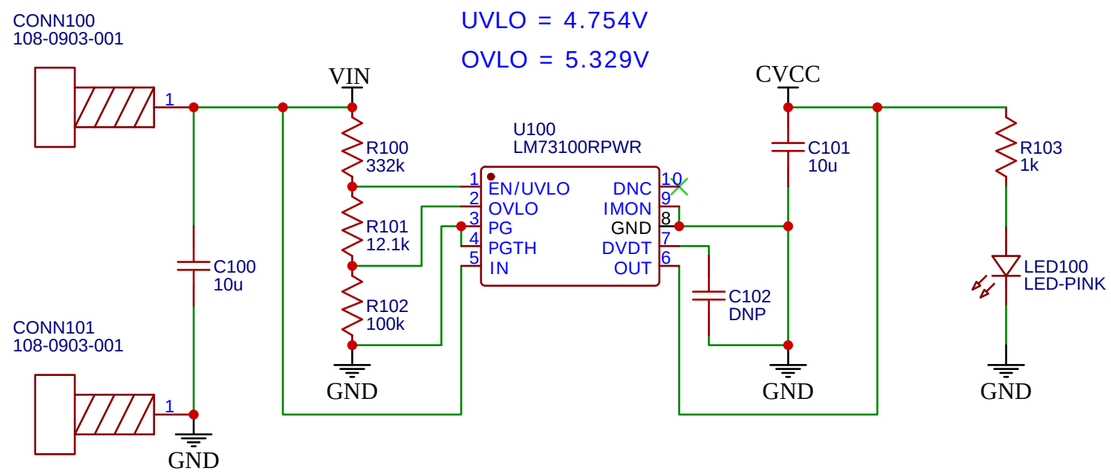

TITLE: Power_Input		REV: 1.0
	Company:	Sheet: 1/1
	Date: 2024-05-15 Drawn By:	

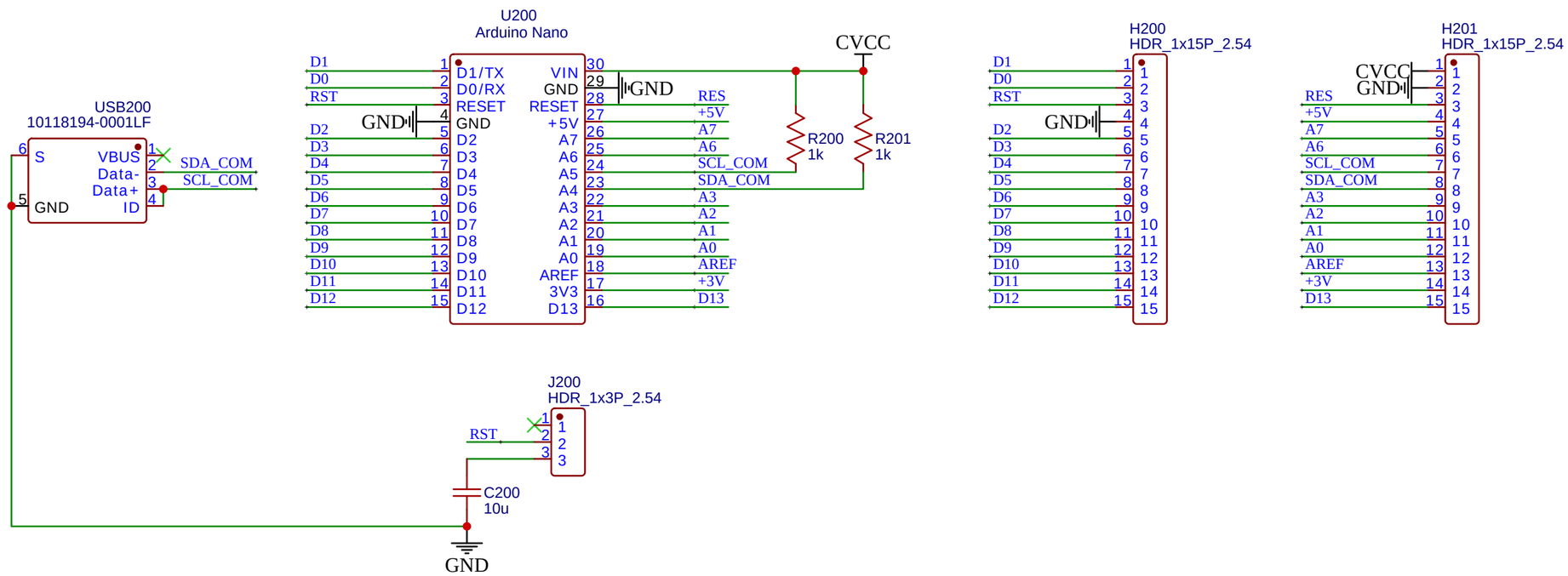

TITLE: PMBus_Master		REV: 1.0
	Company: Your Company	Sheet: 1/1
	Date: 2024-05-21 Drawn By:	

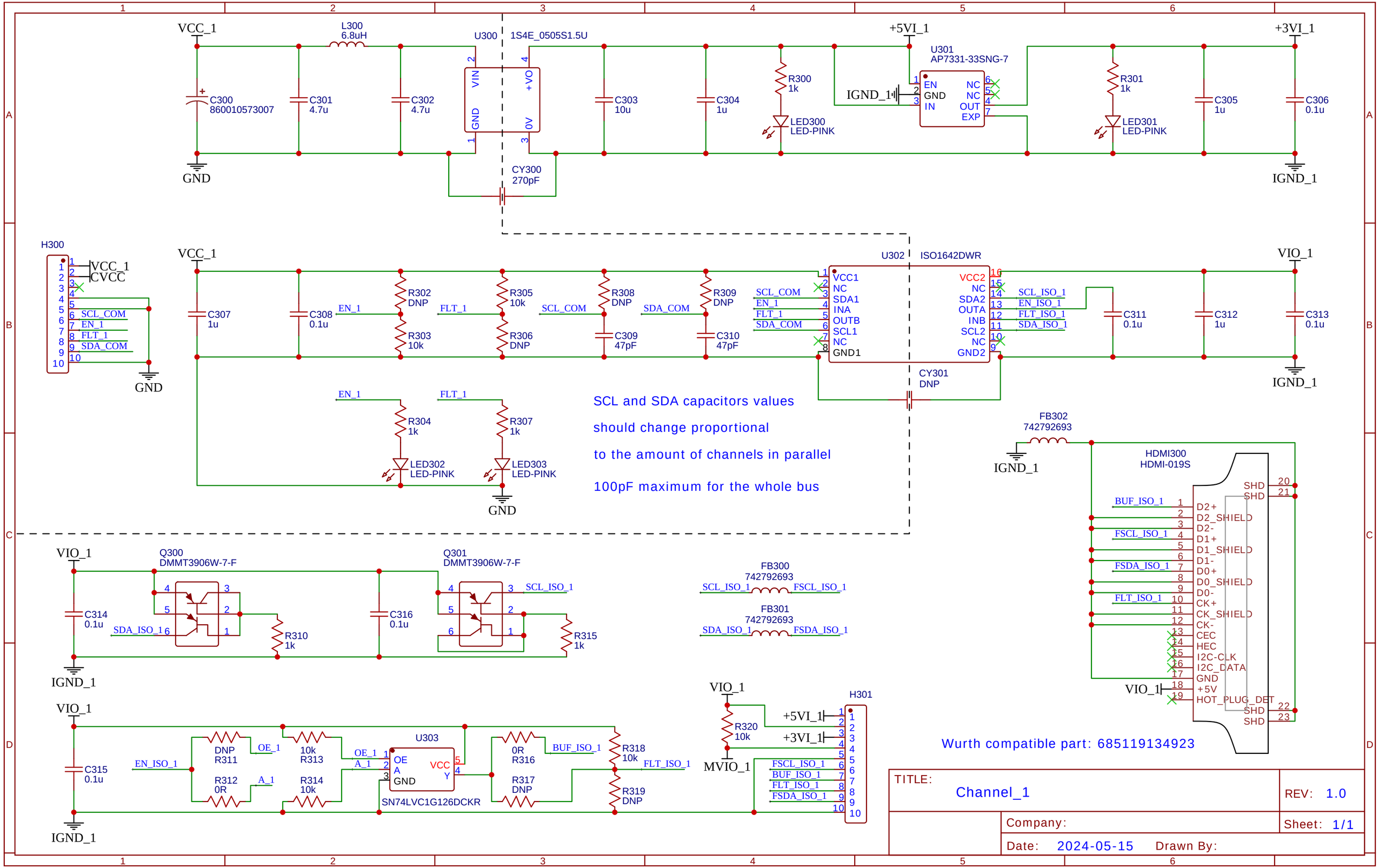
VCC_1
L300
6.8uH
U300
1S4E_0505S1.5U
VIN
GND
+VO
0V
C300
860010573007
C301
4.7u
C302
4.7u
C303
10u
C304
1u
R300
1k
LED300
LED-PINK
+5VI_1
U301
AP7331-33SNG-7
EN
GND
IN
NC
NC
OUT
EXP
IGND_1
R301
1k
LED301
LED-PINK
C305
1u
C306
0.1u
+3VI_1
GND
CY300
270pF
IGND_1
H300
VCC_1
CVCC
SCL_COM
EN_1
FLT_1
SDA_COM
GND
VCC_1
C307
1u
C308
0.1u
EN_1
R302
DNP
R303
10k
FLT_1
R305
10k
R306
DNP
SCL_COM
R308
DNP
C309
47pF
SDA_COM
R309
DNP
C310
47pF
U302
ISO1642DWR
VCC1
NC
SDA1
INA
OUTB
SCL1
NC
GND1
VCC2
NC
SDA2
OUTA
INB
SCL2
NC
GND2
SCL_ISO_1
EN_ISO_1
FLT_ISO_1
SDA_ISO_1
C311
0.1u
C312
1u
C313
0.1u
VIO_1
IGND_1
CY301
DNP
EN_1
R304
1k
LED302
LED-PINK
FLT_1
R307
1k
LED303
LED-PINK
GND
SCL and SDA capacitors values
should change proportional
to the amount of channels in parallel
100pF maximum for the whole bus
FB302
742792693
IGND_1
HDMI300
HDMI-019S
BUF_ISO_1
FSCL_ISO_1
FSDA_ISO_1
FLT_ISO_1
D2+
D2_SHIELD
D2-
D1+
D1_SHIELD
D1-
D0+
D0_SHIELD
D0-
CK+
CK_SHIELD
CK-
CEC
HEC
I2C-CLK
I2C_DATA
GND
+5V
HOT_PLUG_DET
SHD
VIO_1
Wurth compatible part: 685119134923
VIO_1
Q300
DMMT3906W-7-F
C314
0.1u
SDA_ISO_1
R310
1k
C316
0.1u
Q301
DMMT3906W-7-F
SCL_ISO_1
R315
1k
IGND_1
FB300
742792693
SCL_ISO_1
FSCL_ISO_1
FB301
742792693
SDA_ISO_1
FSDA_ISO_1
VIO_1
C315
0.1u
EN_ISO_1
DNP
R311
R312
0R
OE_1
A_1
10k
R313
R314
10k
U303
OE
A
GND
VCC
Y
SN74LVC1G126DCKR
0R
R316
R317
DNP
BUF_ISO_1
R318
10k
R319
DNP
FLT_ISO_1
IGND_1
VIO_1
R320
10k
MVIO_1
H301
+5VI_1
+3VI_1
FSCL_ISO_1
BUF_ISO_1
FLT_ISO_1
FSDA_ISO_1
TITLE:
Channel_1
REV: 1.0
Company:
Sheet: 1/1
Date: 2024-05-15
Drawn By:

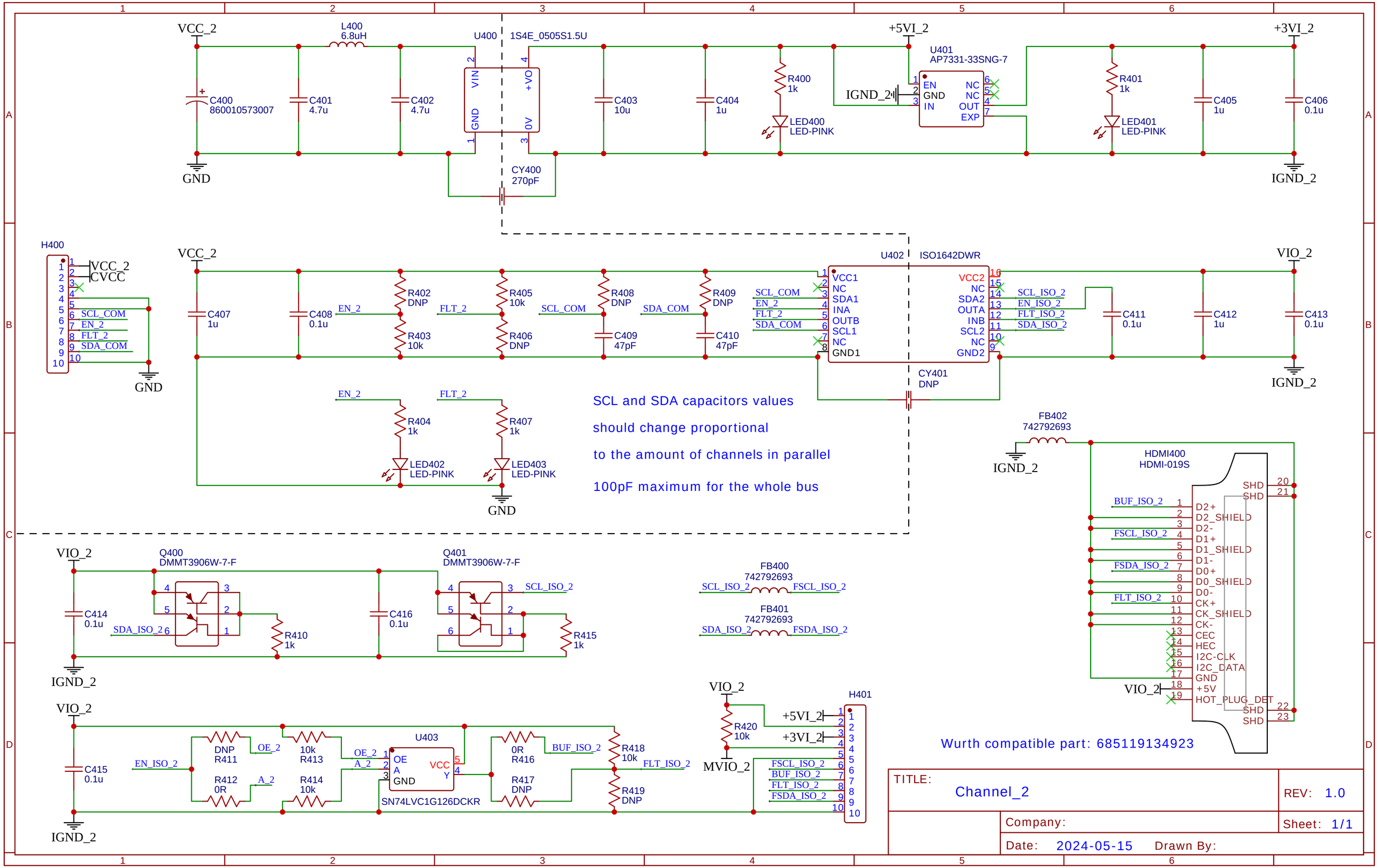
VCC_2
L400
6.8uH
U400
1S4E_0505S1.5U
VIN
GND
+VO
0V
C400
860010573007
C401
4.7u
C402
4.7u
C403
10u
C404
1u
R400
1k
LED400
LED-PINK
+5VI_2
U401
AP7331-33SNG-7
EN
GND
IN
NC
NC
OUT
EXP
IGND_2
R401
1k
LED401
LED-PINK
C405
1u
+3VI_2
C406
0.1u
GND
CY400
270pF
IGND_2
H400
VCC_2
CVCC
SCL_COM
EN_2
FLT_2
SDA_COM
GND
VCC_2
C407
1u
C408
0.1u
EN_2
R402
DNP
R403
10k
FLT_2
R405
10k
R406
DNP
SCL_COM
R408
DNP
C409
47pF
SDA_COM
R409
DNP
C410
47pF
U402
ISO1642DWR
VCC1
NC
SDA1
INA
OUTB
SCL1
NC
GND1
VCC2
NC
SDA2
OUTA
INB
SCL2
NC
GND2
SCL_ISO_2
EN_ISO_2
FLT_ISO_2
SDA_ISO_2
C411
0.1u
C412
1u
VIO_2
C413
0.1u
IGND_2
CY401
DNP
EN_2
R404
1k
LED402
LED-PINK
FLT_2
R407
1k
LED403
LED-PINK
GND
SCL and SDA capacitors values
should change proportional
to the amount of channels in parallel
100pF maximum for the whole bus
FB402
742792693
IGND_2
HDMI400
HDMI-019S
BUF_ISO_2
FSCL_ISO_2
FSDA_ISO_2
FLT_ISO_2
D2+
D2_SHIELD
D2-
D1+
D1_SHIELD
D1-
D0+
D0_SHIELD
D0-
CK+
CK_SHIELD
CK-
CEC
HEC
I2C-CLK
I2C_DATA
GND
+5V
HOT_PLUG_DET
SHD
VIO_2
Wurth compatible part: 685119134923
VIO_2
Q400
DMMT3906W-7-F
C414
0.1u
SDA_ISO_2
R410
1k
C416
0.1u
Q401
DMMT3906W-7-F
SCL_ISO_2
R415
1k
IGND_2
FB400
742792693
SCL_ISO_2
FSCL_ISO_2
FB401
742792693
SDA_ISO_2
FSDA_ISO_2
VIO_2
C415
0.1u
EN_ISO_2
DNP
R411
R412
0R
OE_2
A_2
10k
R413
R414
10k
U403
OE
A
GND
VCC
Y
SN74LVC1G126DCKR
0R
R416
R417
DNP
BUF_ISO_2
R418
10k
R419
DNP
FLT_ISO_2
IGND_2
VIO_2
R420
10k
MVIO_2
H401
+5VI_2
+3VI_2
FSCL_ISO_2
BUF_ISO_2
FLT_ISO_2
FSDA_ISO_2
TITLE:
Channel_2
REV: 1.0
Company:
Sheet: 1/1
Date: 2024-05-15
Drawn By: