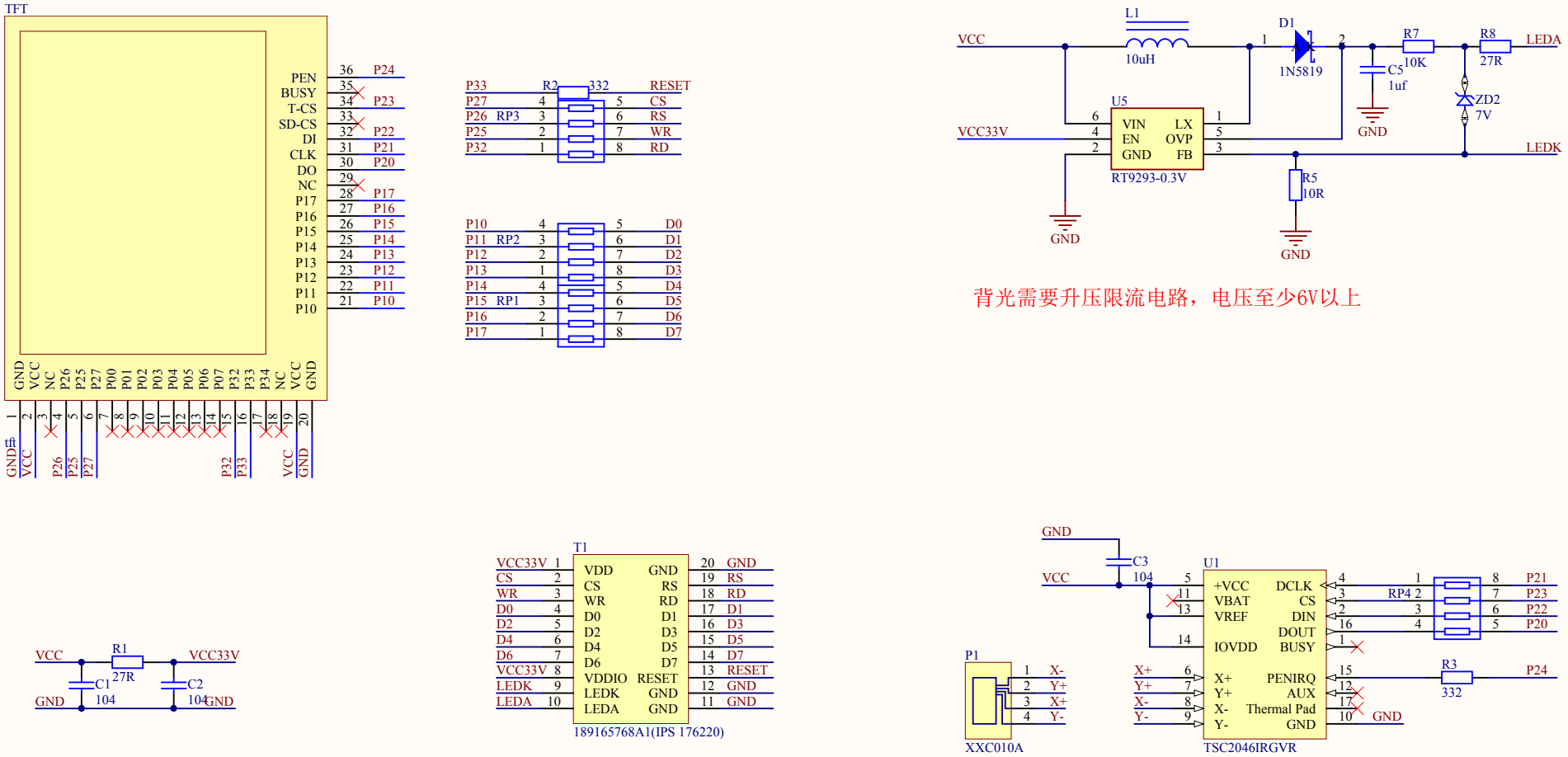

Title		
Size A4	Number	Revision
Date: 2018-6-5		Sheet of
File: F:\ \..\2.0 8bits 189165768A1 20Pin\RB503B XXC010A 180524.SchDoc		Drawn By: