CR-6 SE 挤出机构安装说明
Installation Instructions for CR-6 SE Extruder

1、将挤出电机和挤出座固定在挤出板上

1、Fix the extrusion motor and extrusion base on the extrusion plate.

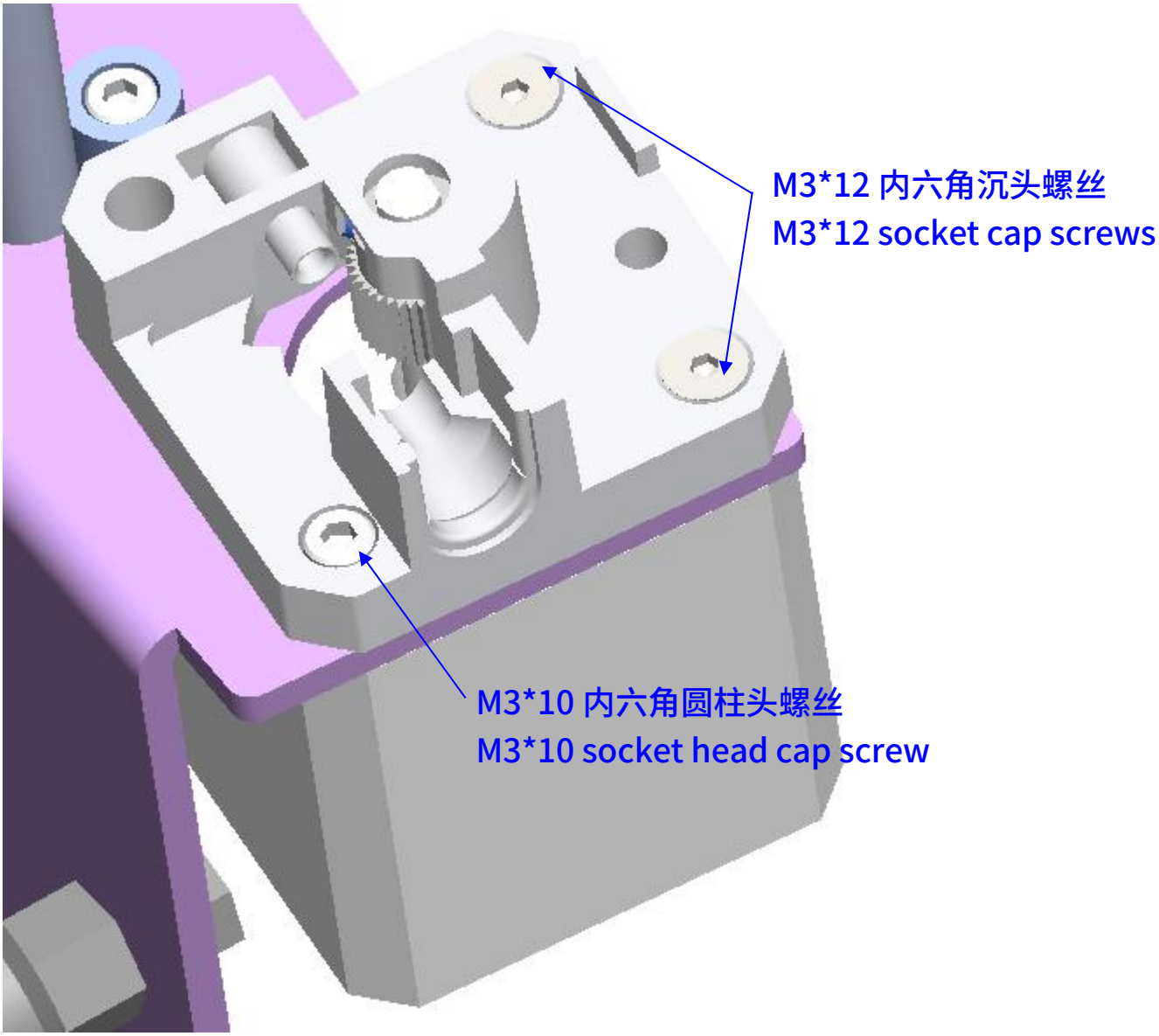

2.安装卡爪卡环和卡爪卡座

2. Install the claw retaining ring and claw clamp base

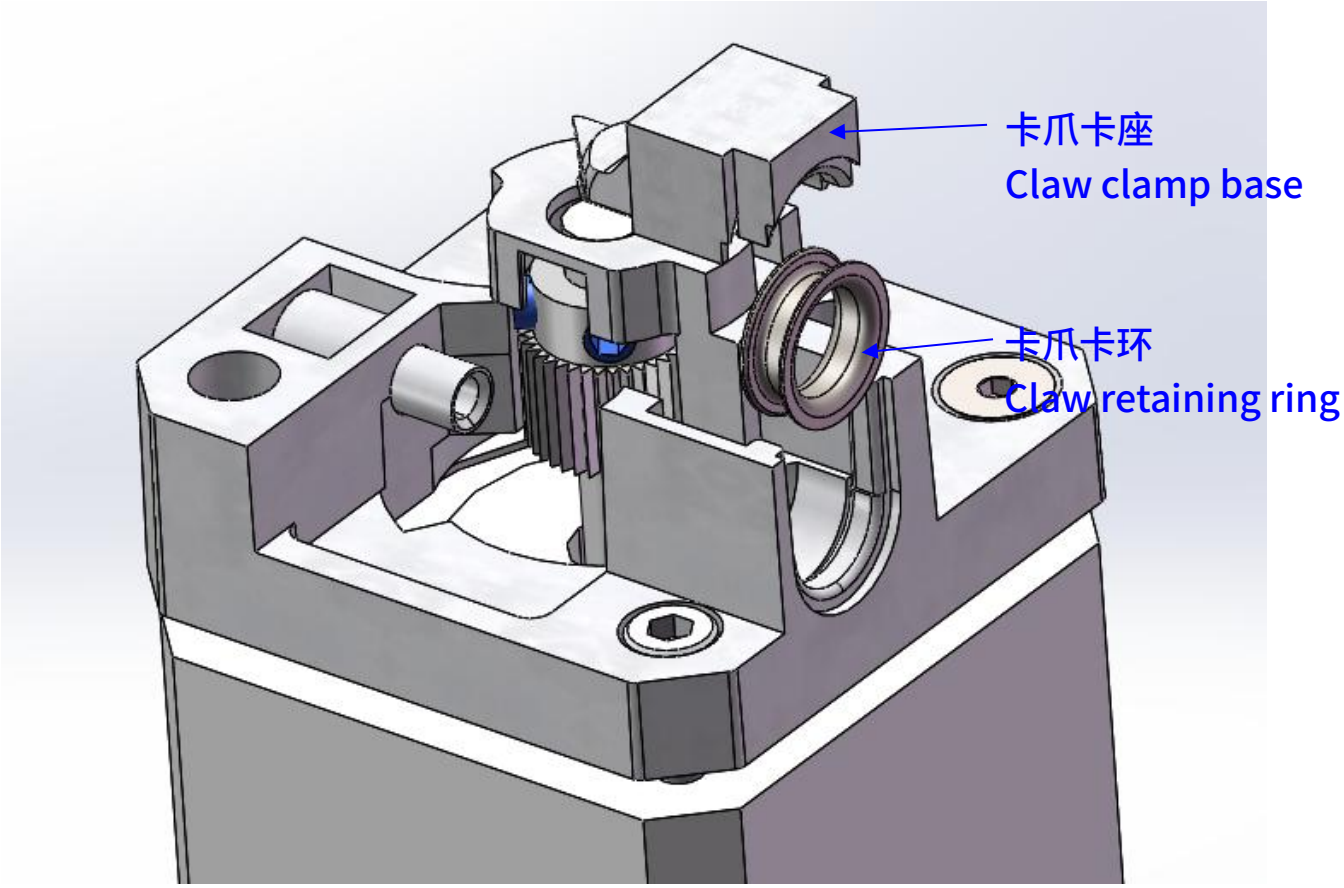

3. 安装轴承 Install the bearing

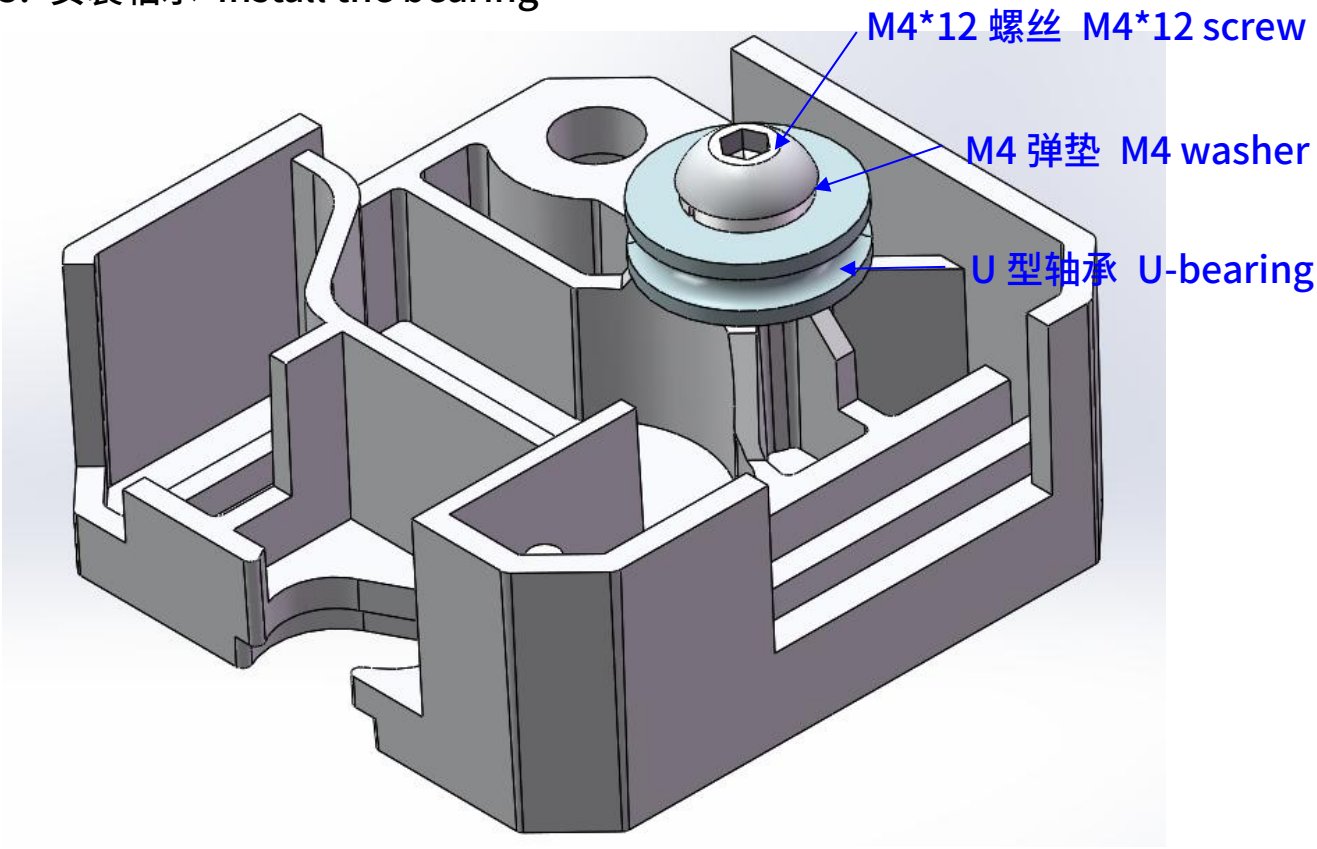

4.安装挤出盖和弹簧调节部分

4. Install the extrusion cover and spring parts.

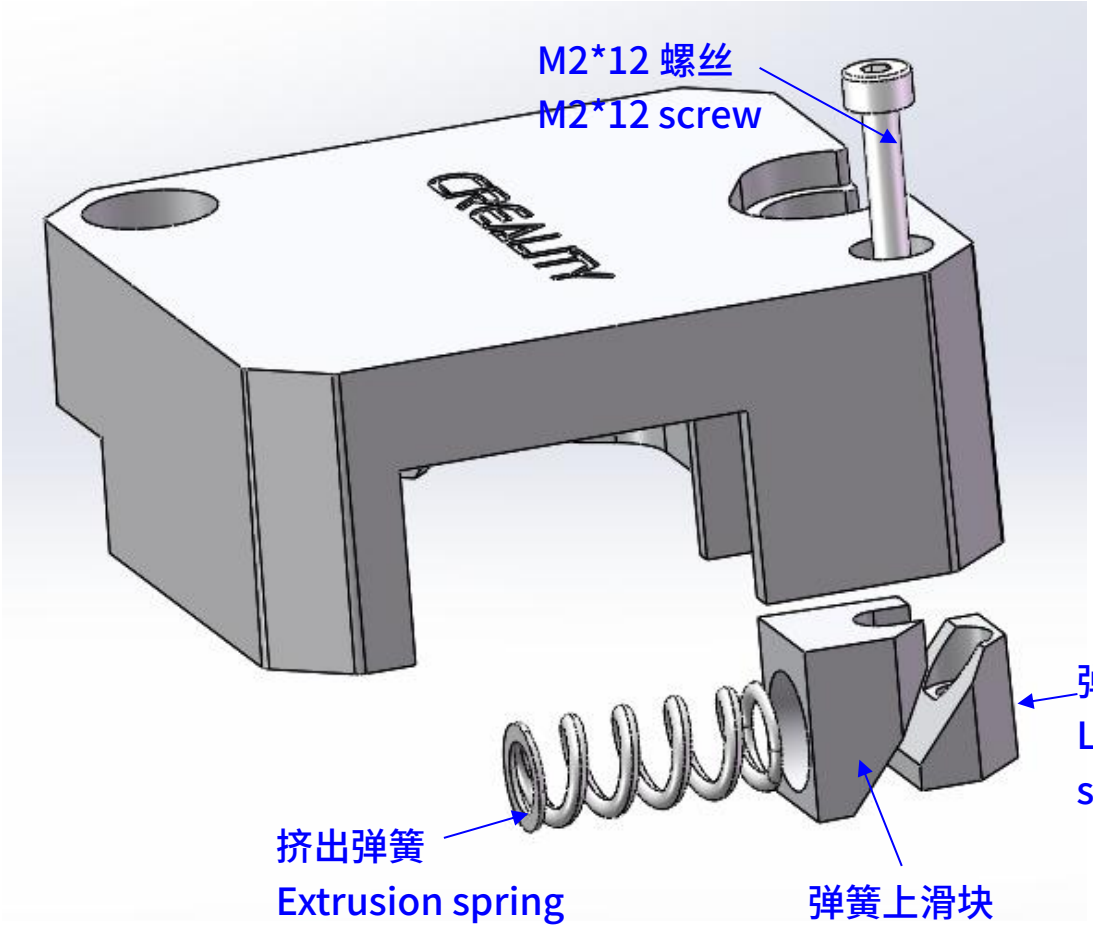

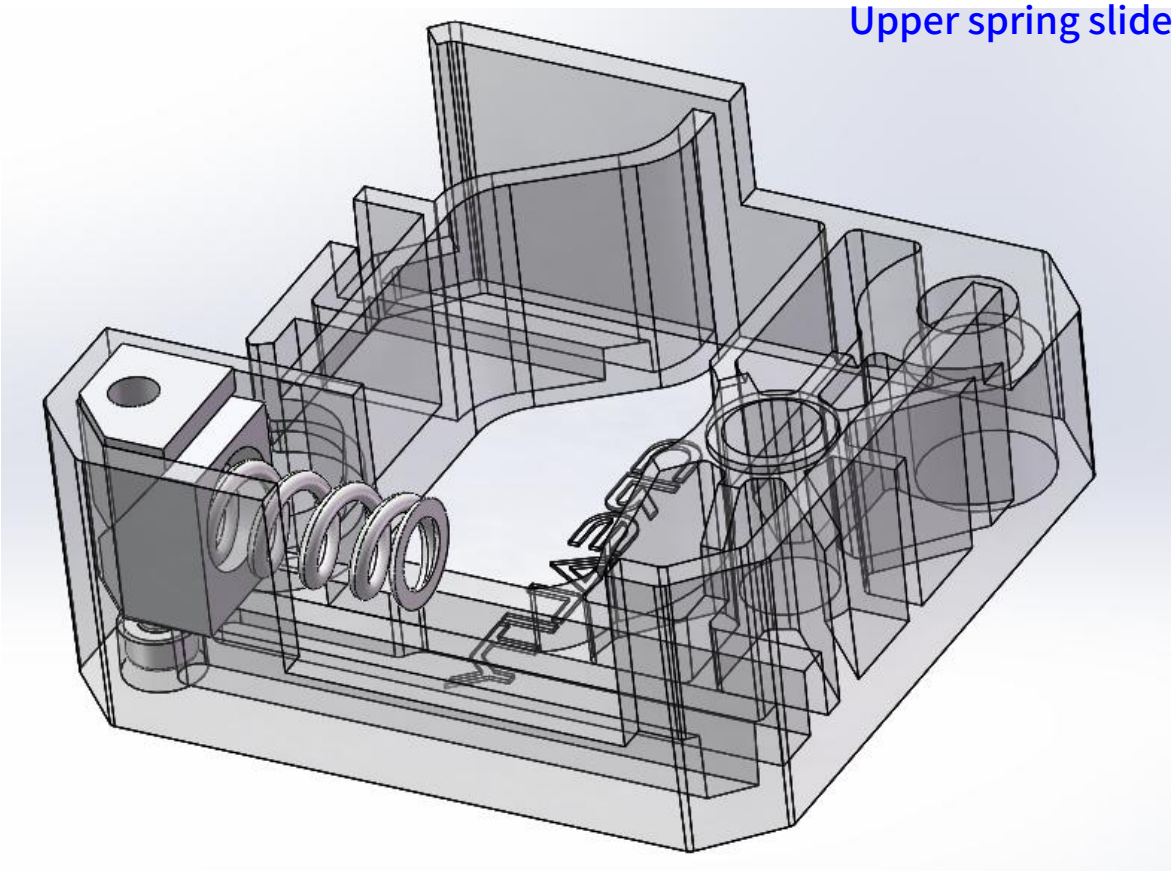

5. 将挤出盖部分安装在挤出座上 Install the extrusion cover on extrusion base.

（1）如图所示手扶弹簧 Hold the spring as shown in the figure.

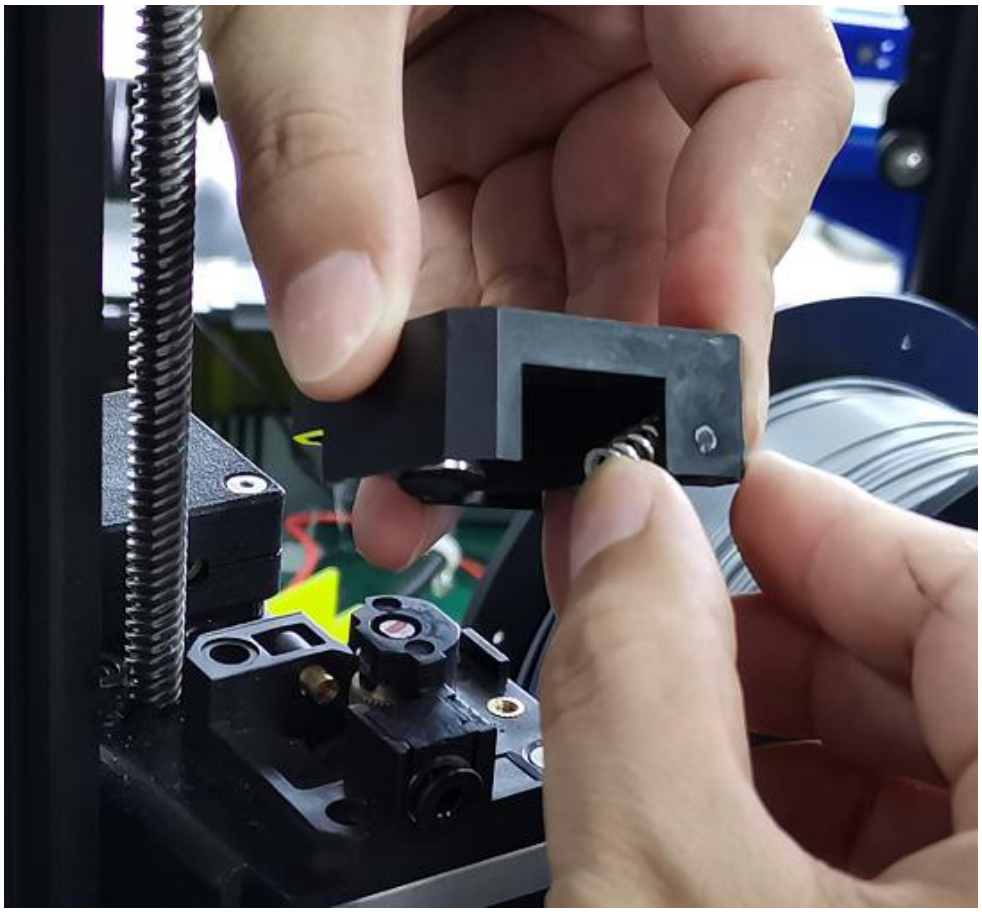

（2）弹簧适当倾斜轻压在挤出座图示位置

Tilt the spring properly and press the extrusion base lightly as shown in the figure

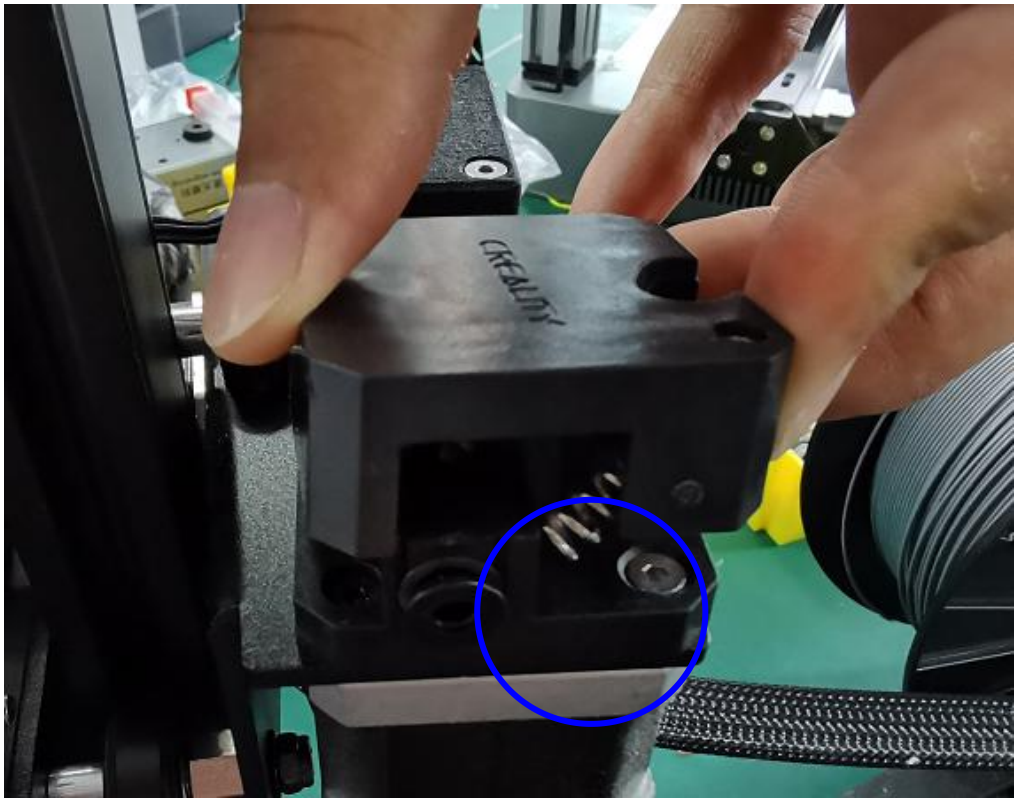

（3）适当用力扭动下压挤出盖

Press the extrusion cover properly

6. 安装固定螺丝和扳手挤出夹 Install the set screw and extrusion clip

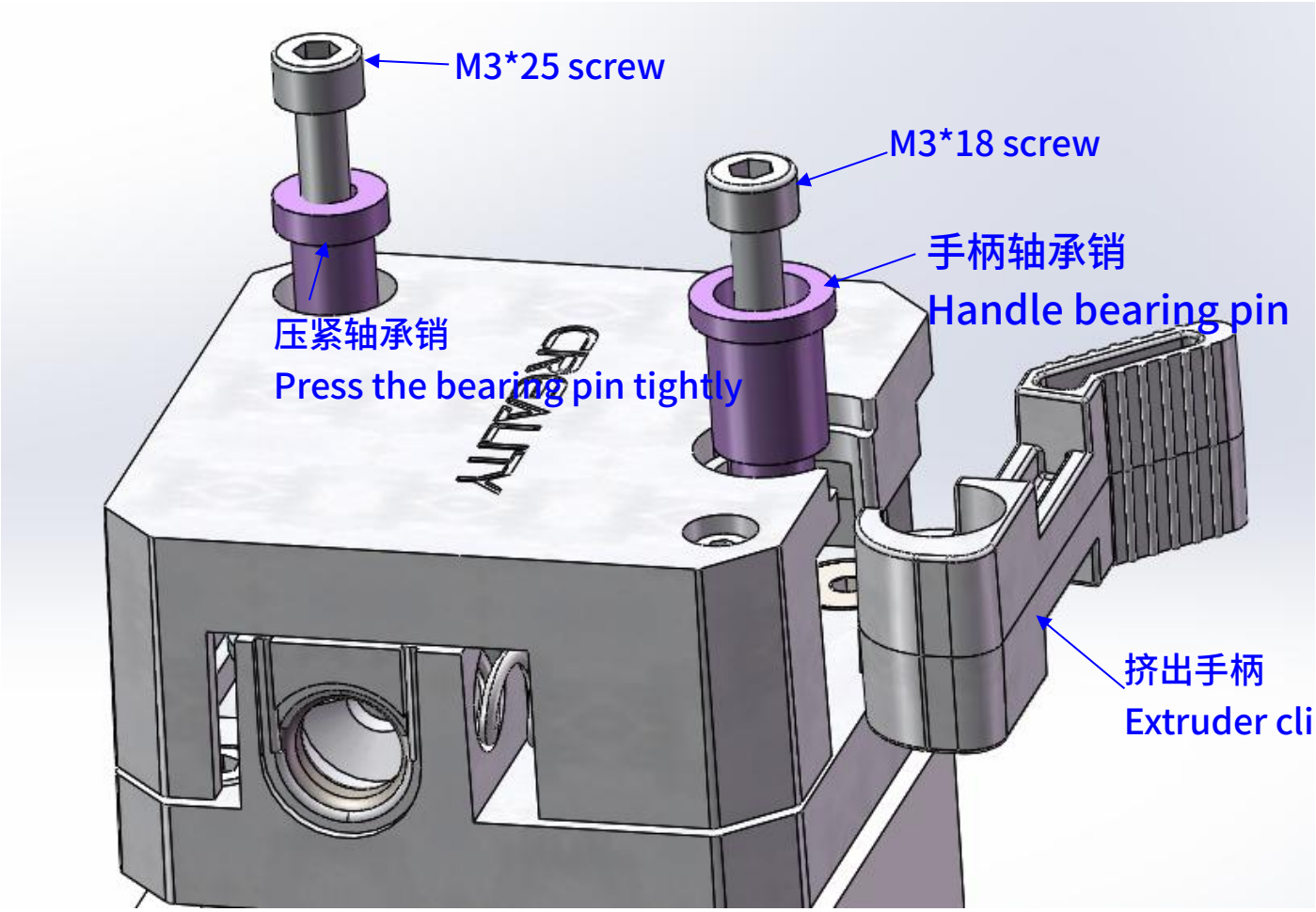

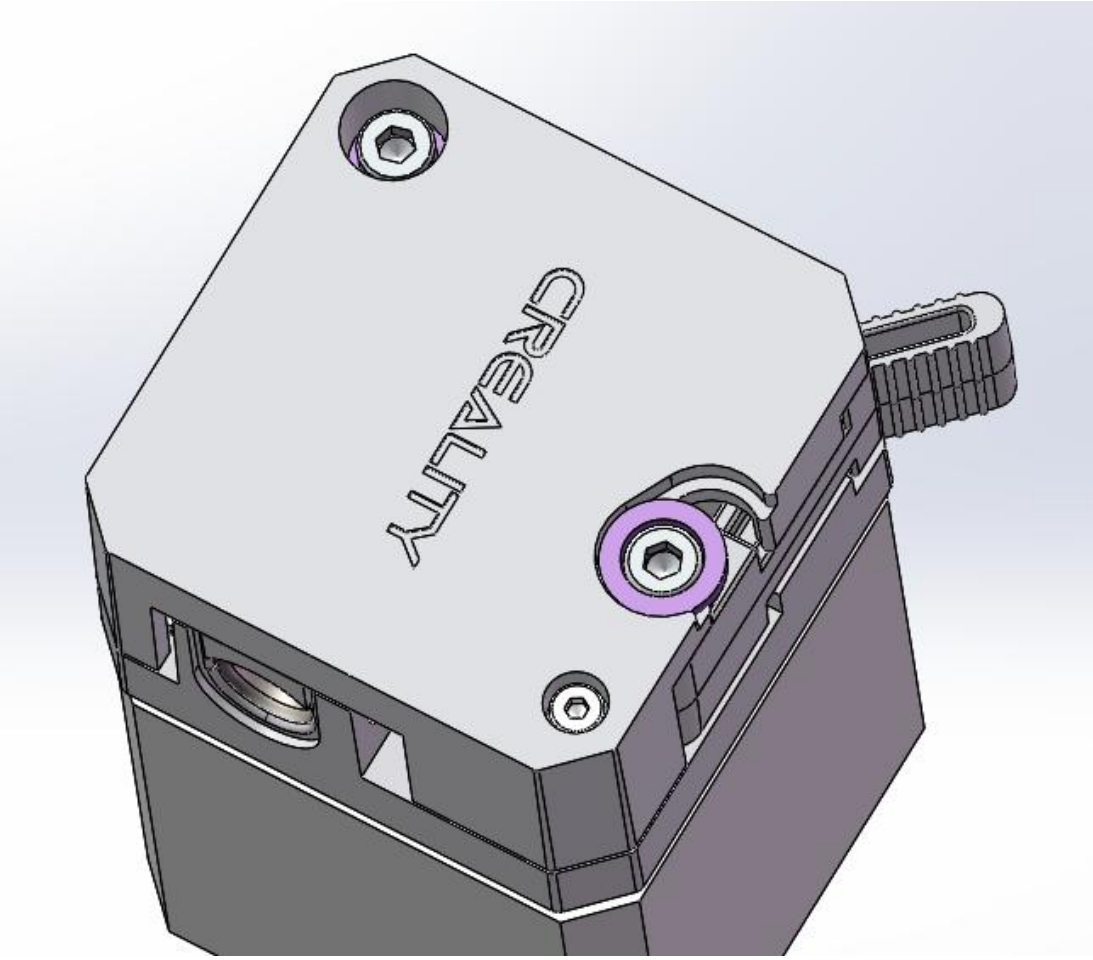

7. 安装卡爪、铁氟龙管、卡爪夹　Install the claw, Teflon tube and claw clamp.

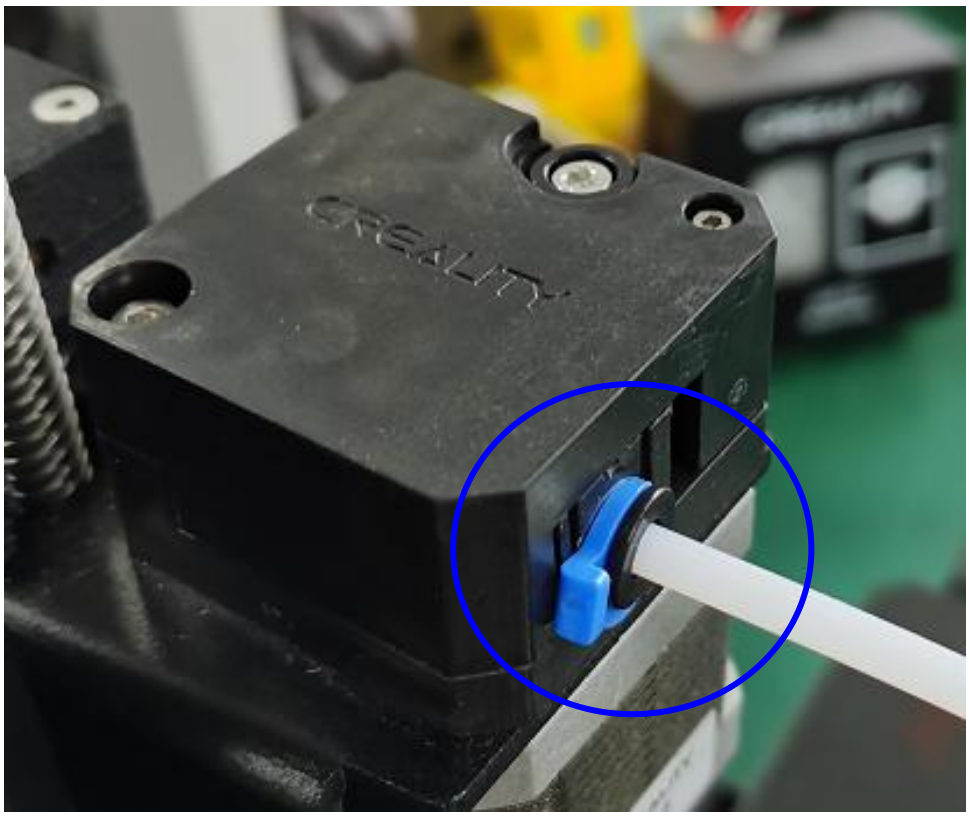
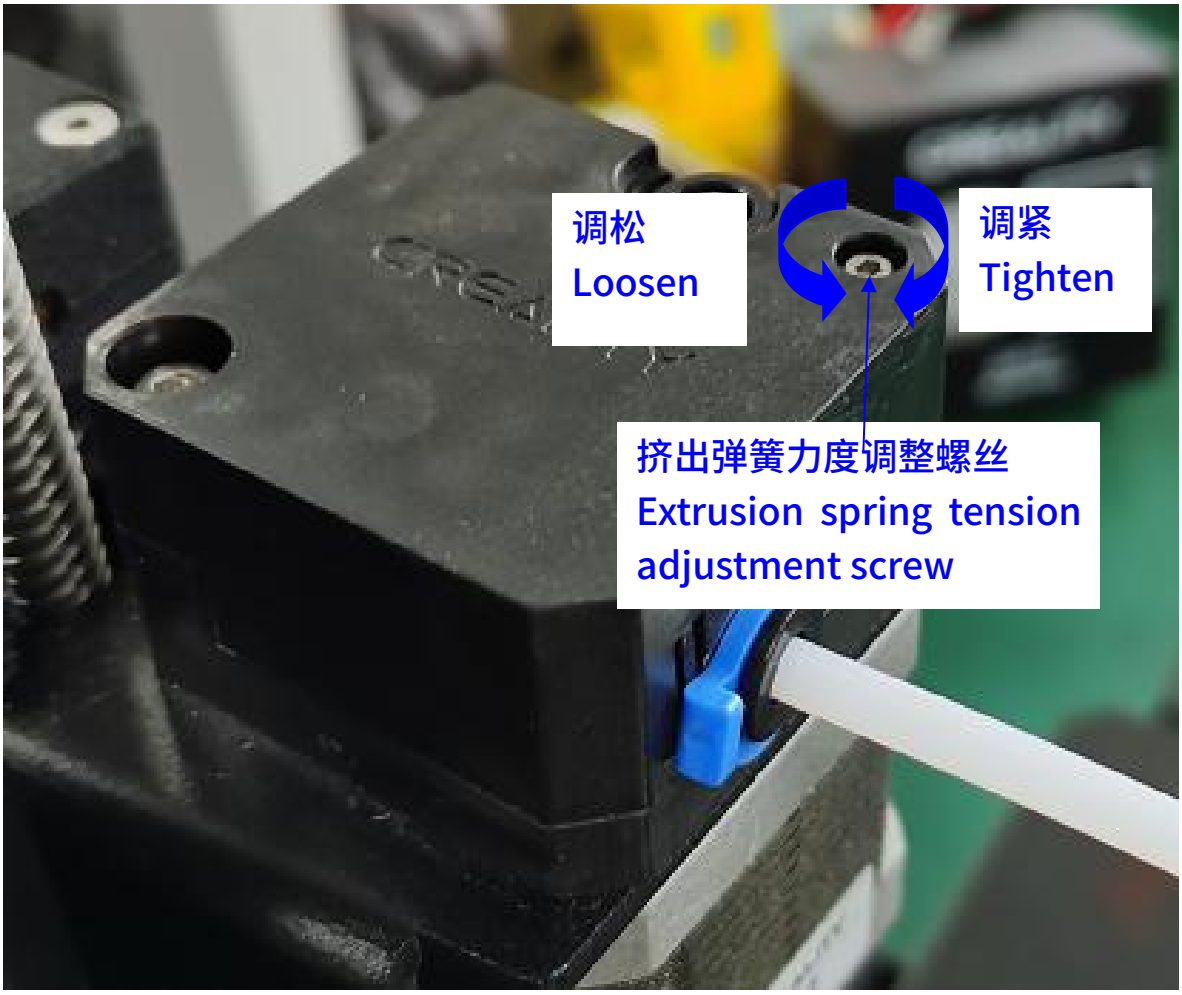
8. 打印过程中依据打印喷嘴出丝状况适当调整挤出弹簧力度（挤出打滑无力时调紧）
Adjust extrusion spring tension properly according to the filament flow during the printing. (Tighten the tension spring when sliding)