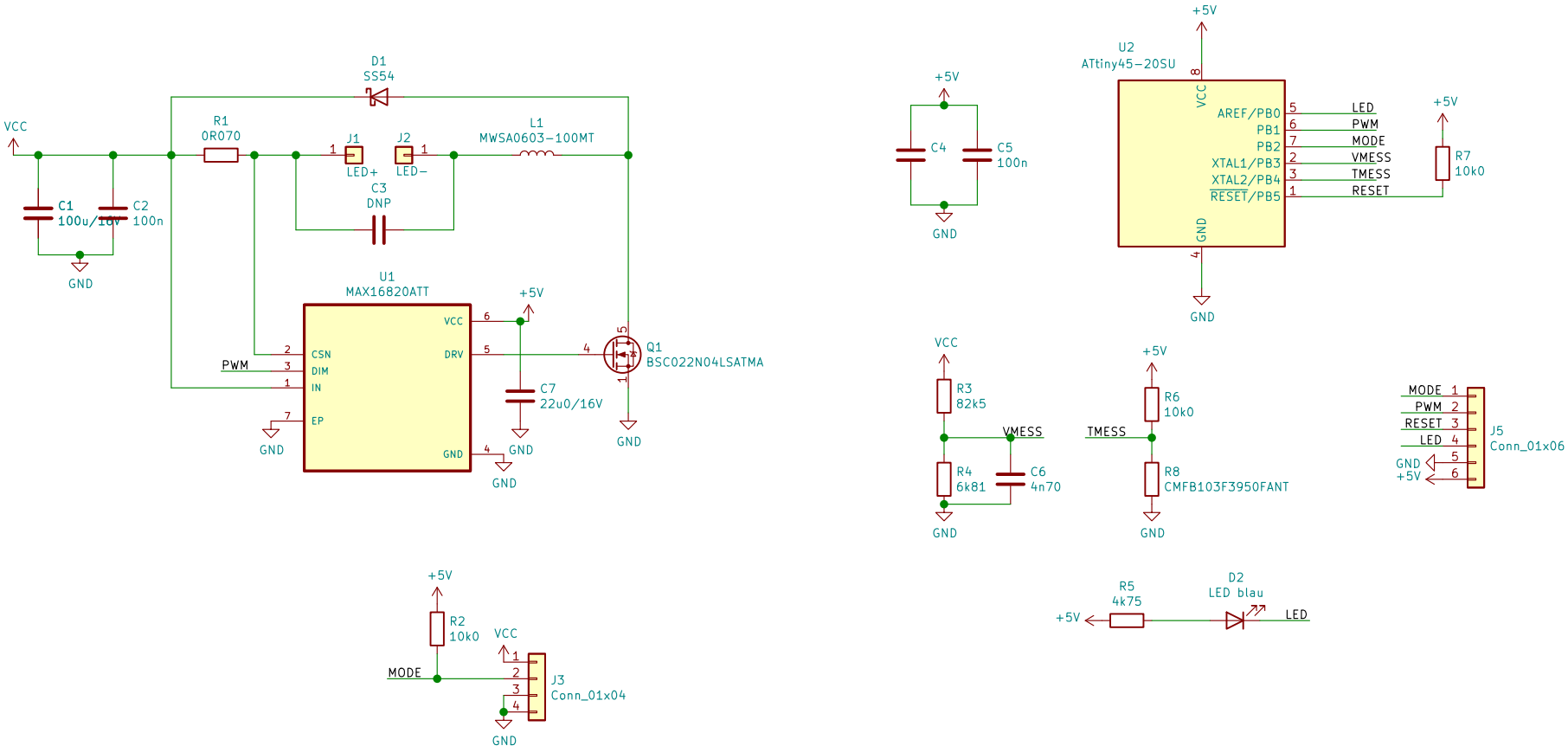

H1
M1

H2
M2

Sheet: /
File: buck_3a_v4.sch

Title: LED Buck 3A

Size: A4	Date: 2020-10-30	**Rev: 4**
KiCad E.D.A. kicad 5.1.9+dfsg1-1		Id: 1/1