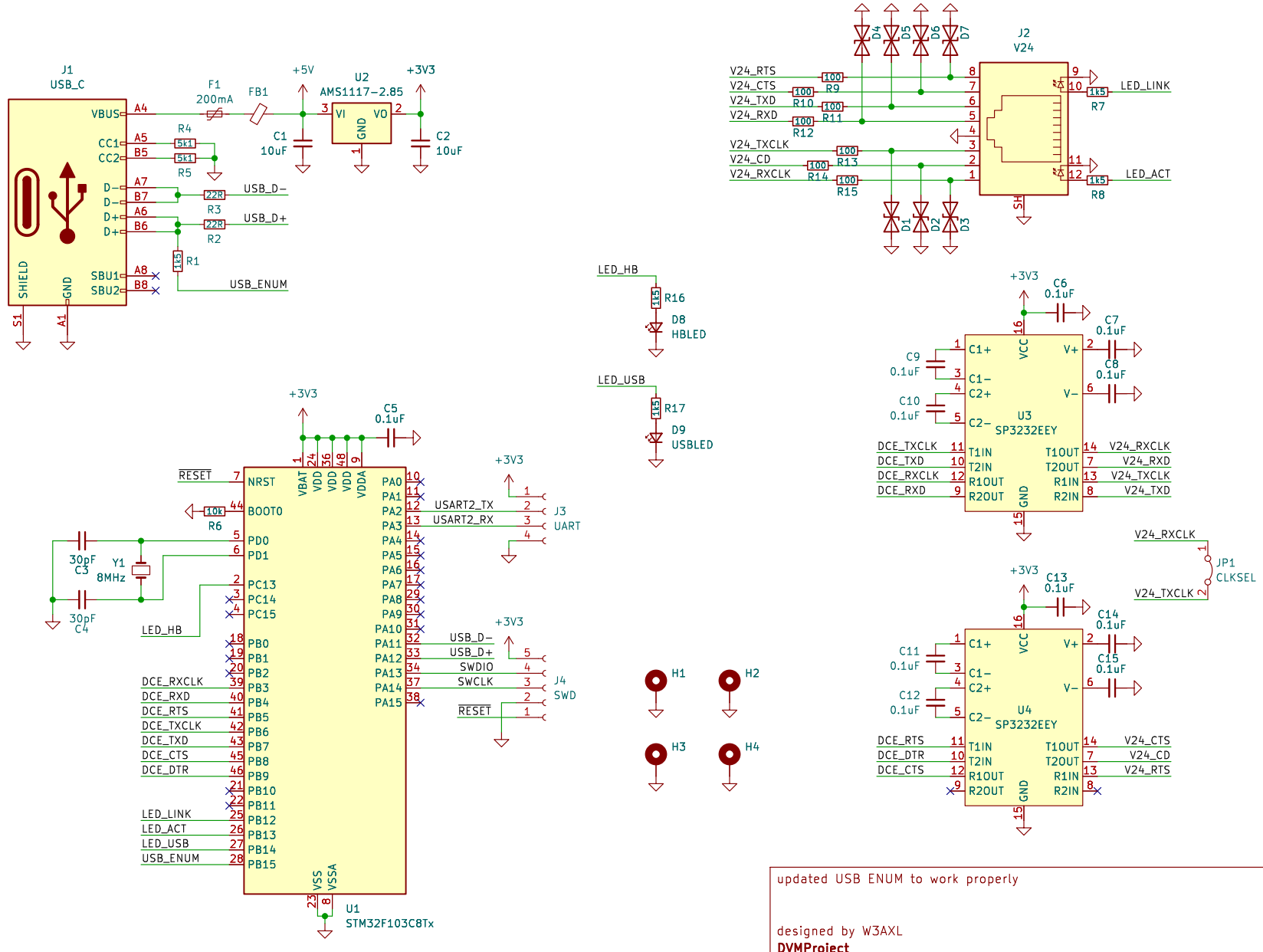

updated USB ENUM to work properly

designed by W3AXL

DVMProject

Sheet: /

File: v24−mainboard.kicad_sch

Title: DVM−V24

Size: A	Date: 2024−05−11	**Rev: B**
KiCad E.D.A. 8.0.2		Id: 1/1