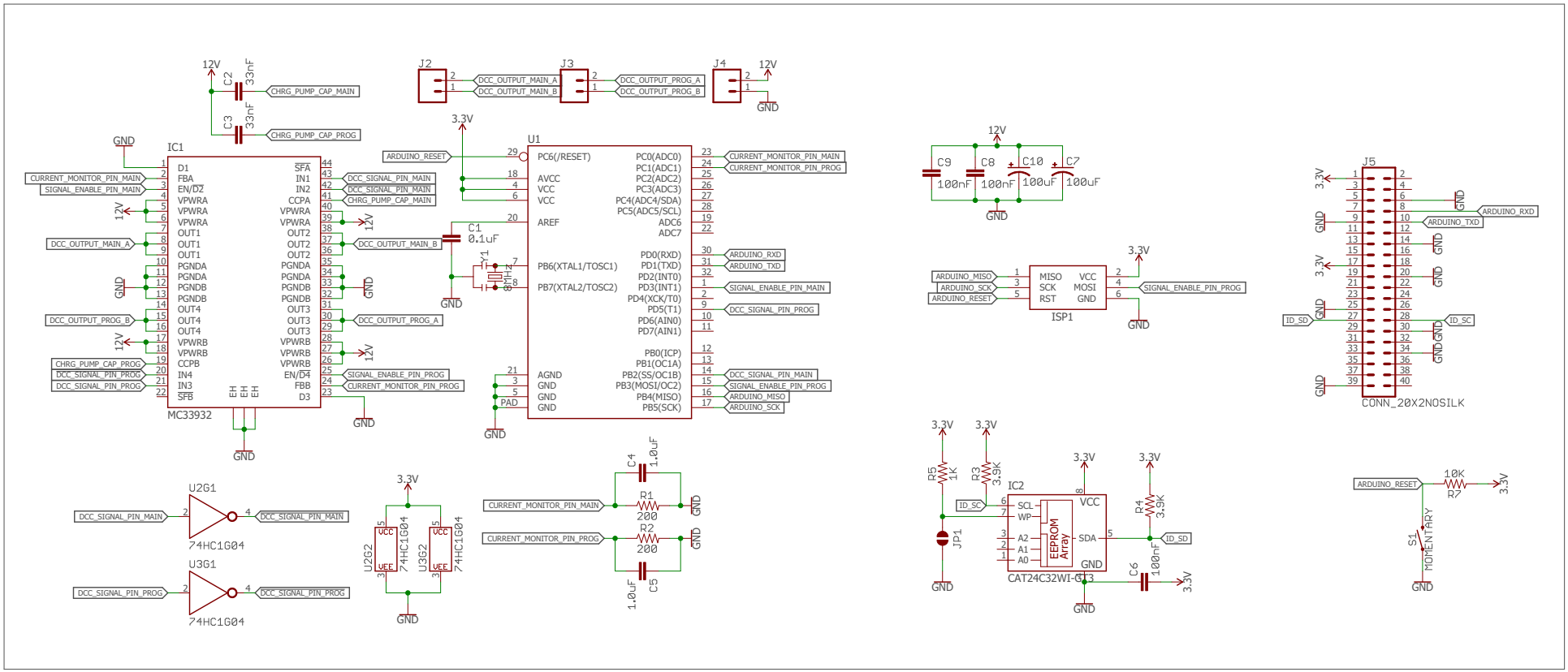
IC1
MC33932
D1
FBA
EN/D2
VPWRA
OUT1
PGNDA
PGNDB
OUT4
VPWRB
CCPB
IN4
IN3
SFB
SFA
IN1
IN2
CCPA
OUT2
OUT3
FBB
D3
EN/D4
CHRG_PUMP_CAP_MAIN
CHRG_PUMP_CAP_PROG
CURRENT_MONITOR_PIN_MAIN
SIGNAL_ENABLE_PIN_MAIN
DCC_OUTPUT_MAIN_A
DCC_OUTPUT_PROG_B
DCC_SIGNAL_PIN_PROG
DCC_SIGNAL_PIN_MAIN
DCC_OUTPUT_MAIN_B
DCC_OUTPUT_PROG_A
SIGNAL_ENABLE_PIN_PROG
CURRENT_MONITOR_PIN_PROG
U1
PC6(/RESET)
AVCC
VCC
AREF
PB6(XTAL1/TOSC1)
PB7(XTAL2/TOSC2)
AGND
GND
PAD
PC0(ADC0)
PC1(ADC1)
PC2(ADC2)
PC3(ADC3)
PC4(ADC4/SDA)
PC5(ADC5/SCL)
ADC6
ADC7
PD0(RXD)
PD1(TXD)
PD2(INT0)
PD3(INT1)
PD4(XCK/T0)
PD5(T1)
PD6(AIN0)
PD7(AIN1)
PB0(ICP)
PB1(OC1A)
PB2(SS/OC1B)
PB3(MOSI/OC2)
PB4(MISO)
PB5(SCK)
ARDUINO_RESET
ARDUINO_RXD
ARDUINO_TXD
ARDUINO_MISO
ARDUINO_SCK
C1 0.1uF
Y1 8MHz
C2 33nF
C3 33nF
J2
J3
J4
12V
3.3V
GND
U2G1
U3G1
74HC1G04
U2G2
U3G2
VCC
VEE
C4 1.0uF
C5 1.0uF
R1 200
R2 200
C9 100nF
C8 100nF
C10 100uF
C7 100uF
ISP1
MISO
SCK
RST
VCC
MOSI
GND
J5
CONN_20X2NOSILK
ID_SD
ID_SC
R5 1K
R3 3.9K
R4 3.9K
JP1
IC2
CAT24C32WI-G
SCL
WP
A2
A1
A0
SDA
EEPROM Array
C6 100nF
R7 10K
S1
MOMENTARY