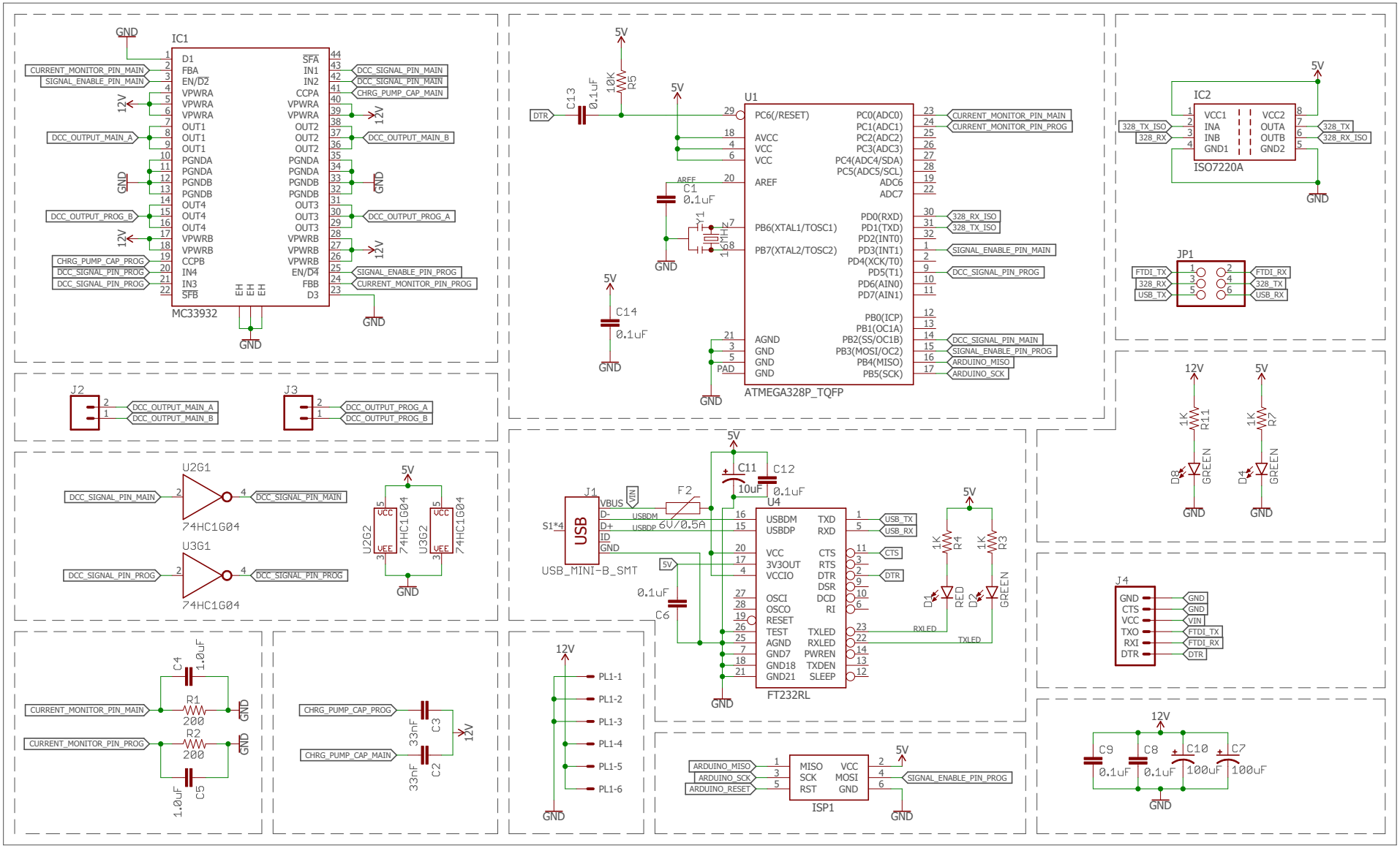
IC1
MC33932
D1
FBA
EN/D2
VPWRA
OUT1
PGNDA
PGNDB
OUT4
VPWRB
CCPB
IN4
IN3
SFB
SFA
IN1
IN2
CCPA
OUT2
OUT3
EN/D4
FBB
D3
CURRENT_MONITOR_PIN_MAIN
SIGNAL_ENABLE_PIN_MAIN
DCC_OUTPUT_MAIN_A
DCC_OUTPUT_PROG_B
CHRG_PUMP_CAP_PROG
DCC_SIGNAL_PIN_PROG
DCC_SIGNAL_PIN_MAIN
CHRG_PUMP_CAP_MAIN
DCC_OUTPUT_MAIN_B
DCC_OUTPUT_PROG_A
SIGNAL_ENABLE_PIN_PROG
CURRENT_MONITOR_PIN_PROG
GND
12V
U1
ATMEGA328P_TQFP
PC6(/RESET)
AVCC
VCC
AREF
PB6(XTAL1/TOSC1)
PB7(XTAL2/TOSC2)
AGND
PAD
PC0(ADC0)
PC1(ADC1)
PC2(ADC2)
PC3(ADC3)
PC4(ADC4/SDA)
PC5(ADC5/SCL)
ADC6
ADC7
PD0(RXD)
PD1(TXD)
PD2(INT0)
PD3(INT1)
PD4(XCK/T0)
PD5(T1)
PD6(AIN0)
PD7(AIN1)
PB0(ICP)
PB1(OC1A)
PB2(SS/OC1B)
PB3(MOSI/OC2)
PB4(MISO)
PB5(SCK)
328_RX_ISO
328_TX_ISO
ARDUINO_MISO
ARDUINO_SCK
DTR
C13
0.1uF
10K
R5
C1
C14
Y1
16MHz
IC2
ISO7220A
VCC1
INA
INB
GND1
VCC2
OUTA
OUTB
GND2
328_TX
328_RX
JP1
FTDI_TX
FTDI_RX
USB_TX
USB_RX
J2
J3
U2G1
U3G1
74HC1G04
U2G2
U3G2
VCC
VEE
J1
USB_MINI-B_SMT
S1*4
VBUS
D-
D+
ID
USBDM
USBDP
F2
6V/0.5A
C11
10uF
C12
U4
FT232RL
USBDM
USBDP
VCC
3V3OUT
VCCIO
OSCI
OSCO
RESET
TEST
AGND
GND7
GND18
GND21
TXD
RXD
CTS
RTS
DTR
DSR
DCD
RI
TXLED
RXLED
PWREN
TXDEN
SLEEP
C6
R4
R3
D1
D2
RED
GREEN
RXLED
TXLED
R11
R7
D8
D4
J4
GND
CTS
VCC
TXO
RXI
DTR
VIN
C4
R1
R2
C5
C3
C2
33nF
PL1-1
PL1-2
PL1-3
PL1-4
PL1-5
PL1-6
ARDUINO_RESET
ISP1
MISO
SCK
RST
MOSI
C9
C8
C10
C7
0.1uF
100uF