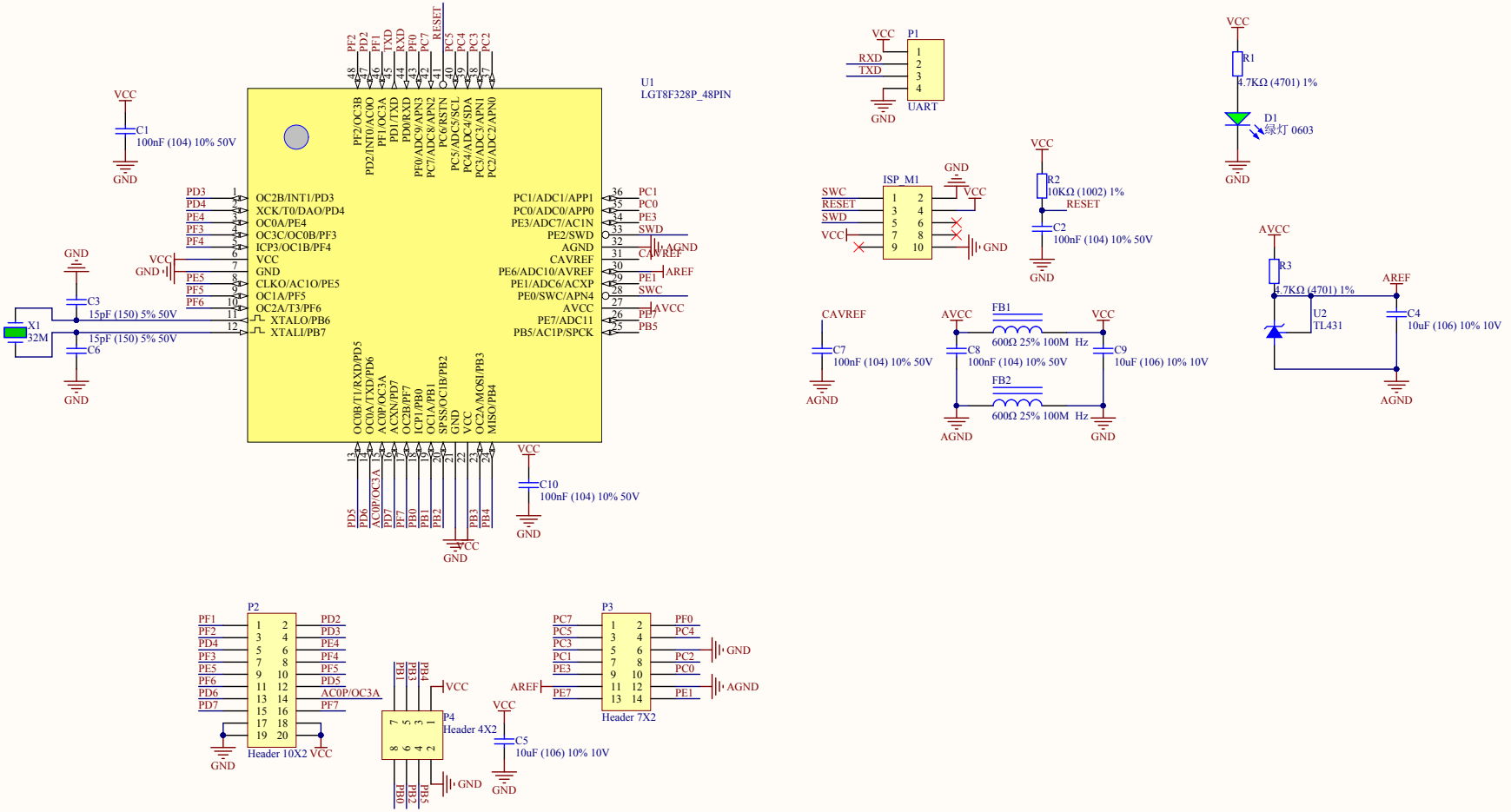

Title		
Size A3	Number	Revision
Date: 2020/3/19		Sheet of
File: G:\Git\..\LGT8F328P_48PIN最小系统.SchDoc		Drawn By: