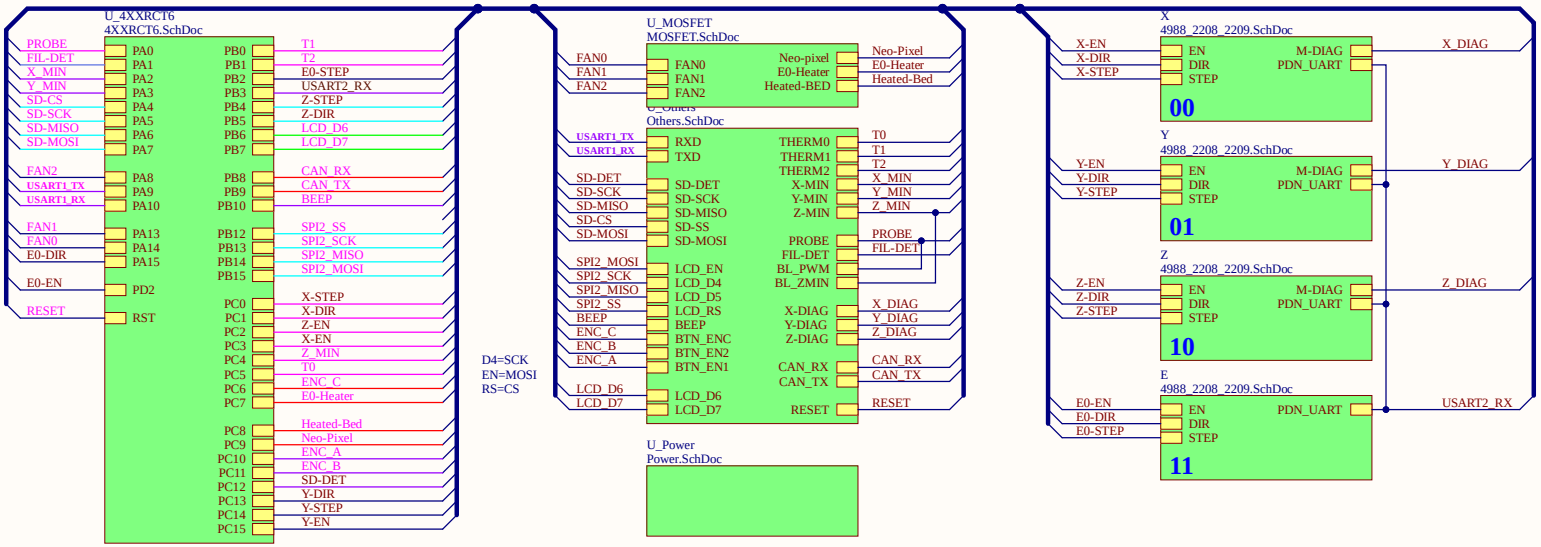

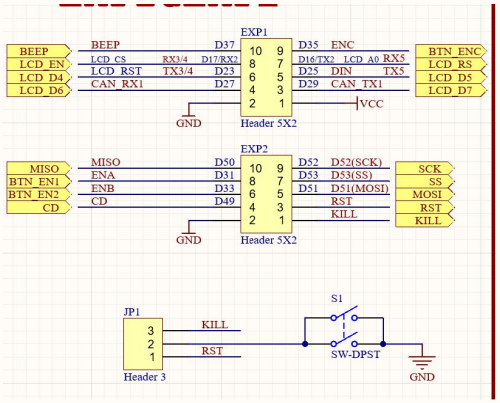

Title Sheet1.SchDoc			
Size: A3	Number: *	Revision: *	
Date: 2023-03-10	Author: *	Sheet 1 of 6	

FYSETC®
www.fysetc.com

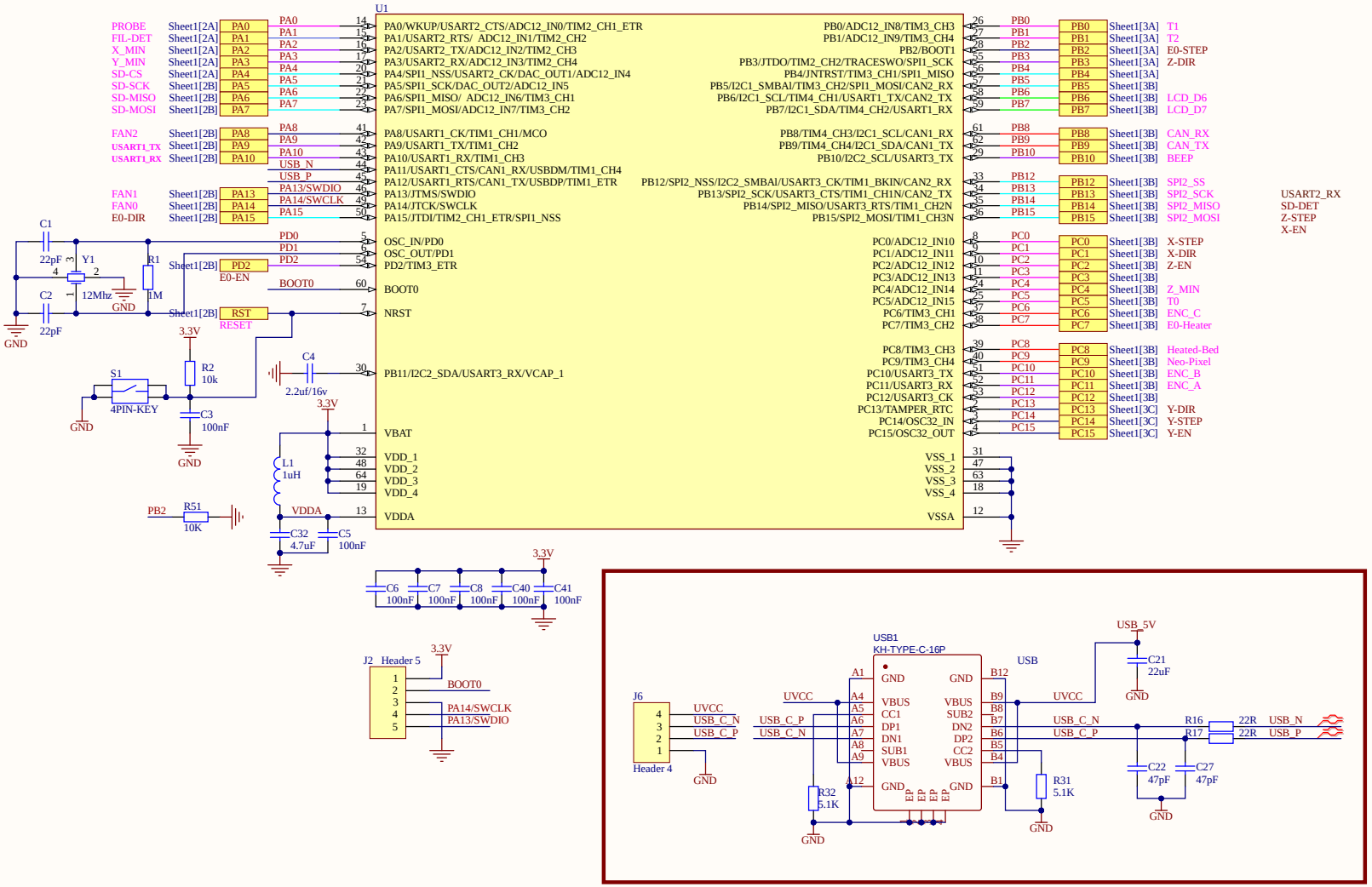

Title 4XXRCT6.SchDoc			FYSETC®
Size: A3	Number: 1	Revision:	www.fysetc.com
Date: 2023-03-10	Author: *	Sheet 2 of 6	

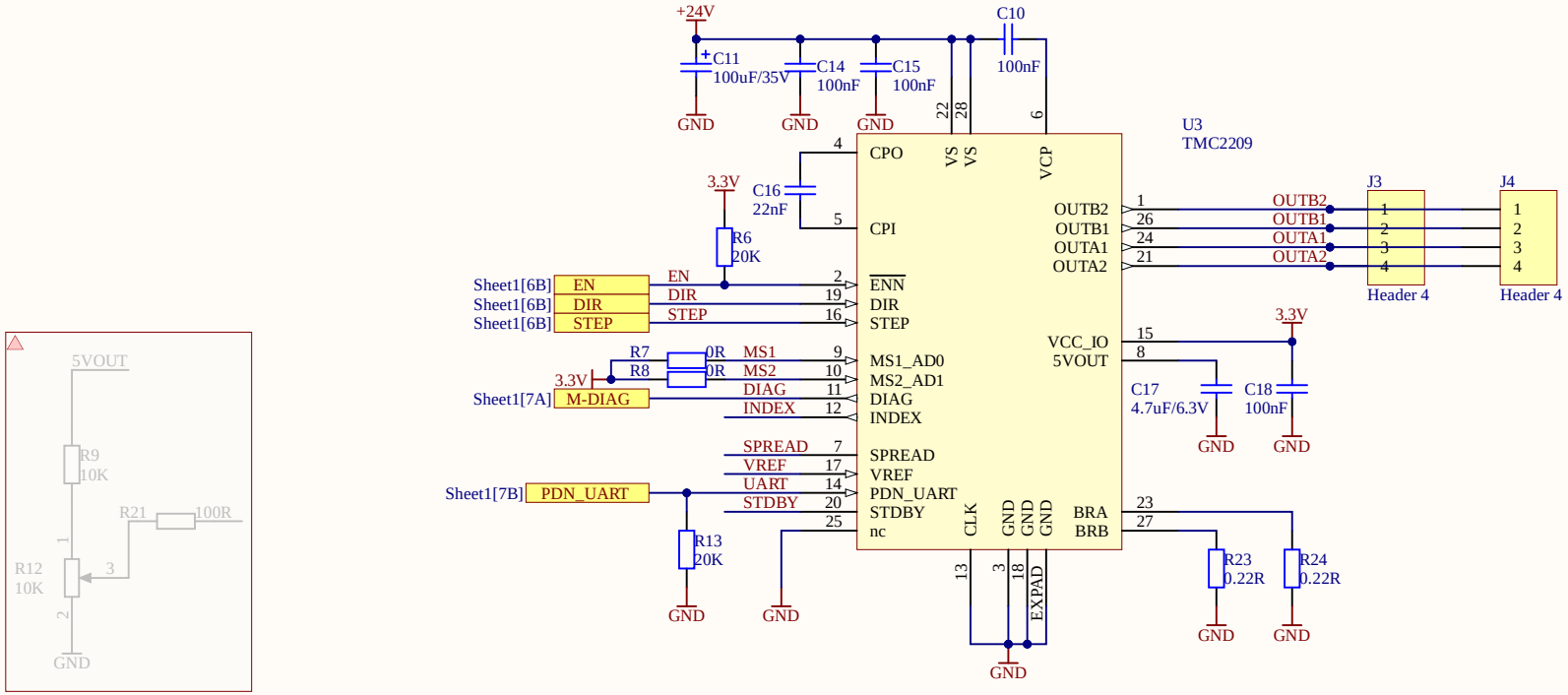

Title 4988_2208_2209.SchDoc		
Size: A4	Number: 5	Revision: *
Date: 2023-03-10	Author: *	Sheet 3 of 6

FYSETC®
www.fysetc.com

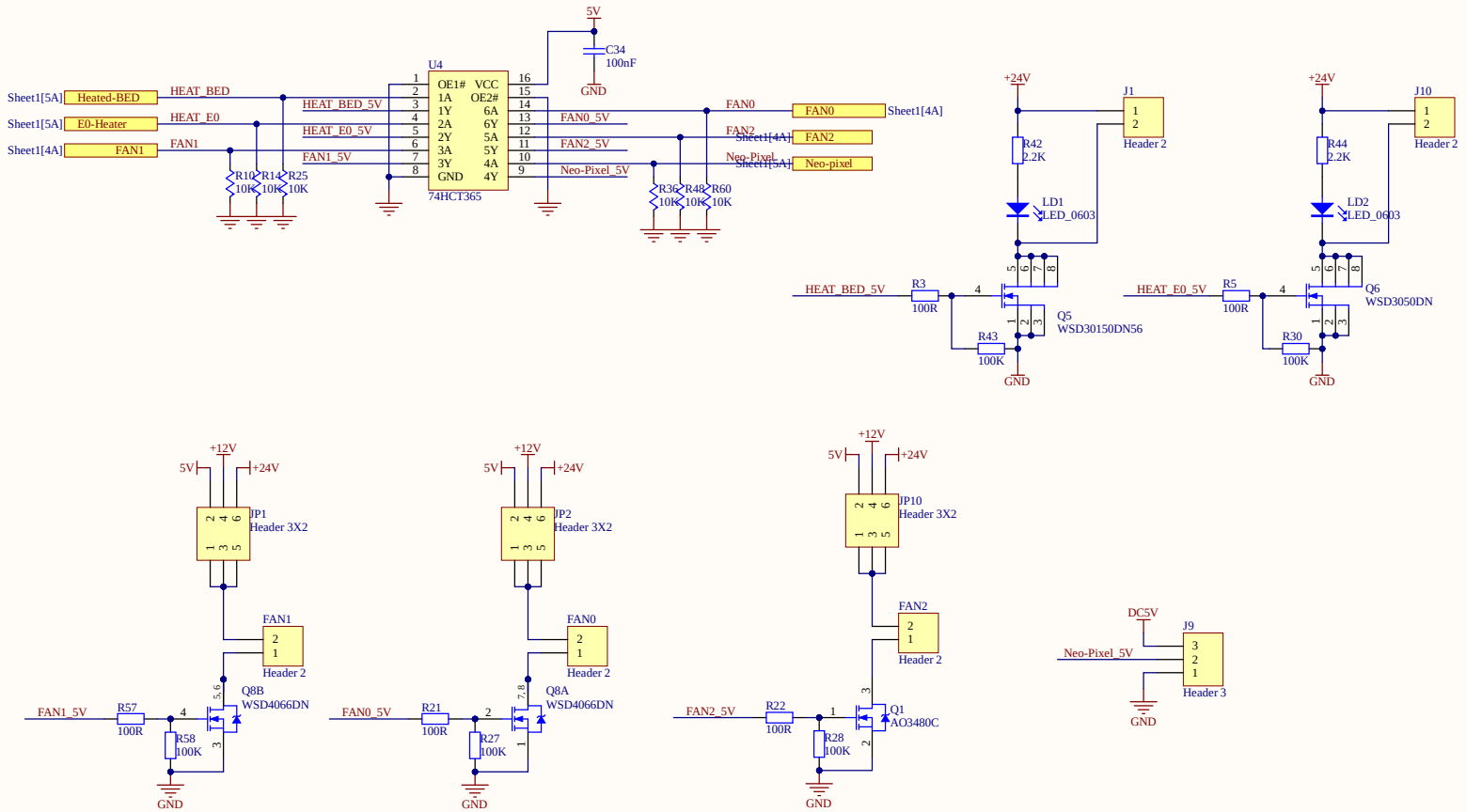

Title	MOSFET.SchDoc		
Size: A3	Number: 2	Revision:	
Date: 2023-03-10	Author: *	Sheet 4 of 6	

FYSETC®
www.fysetc.com

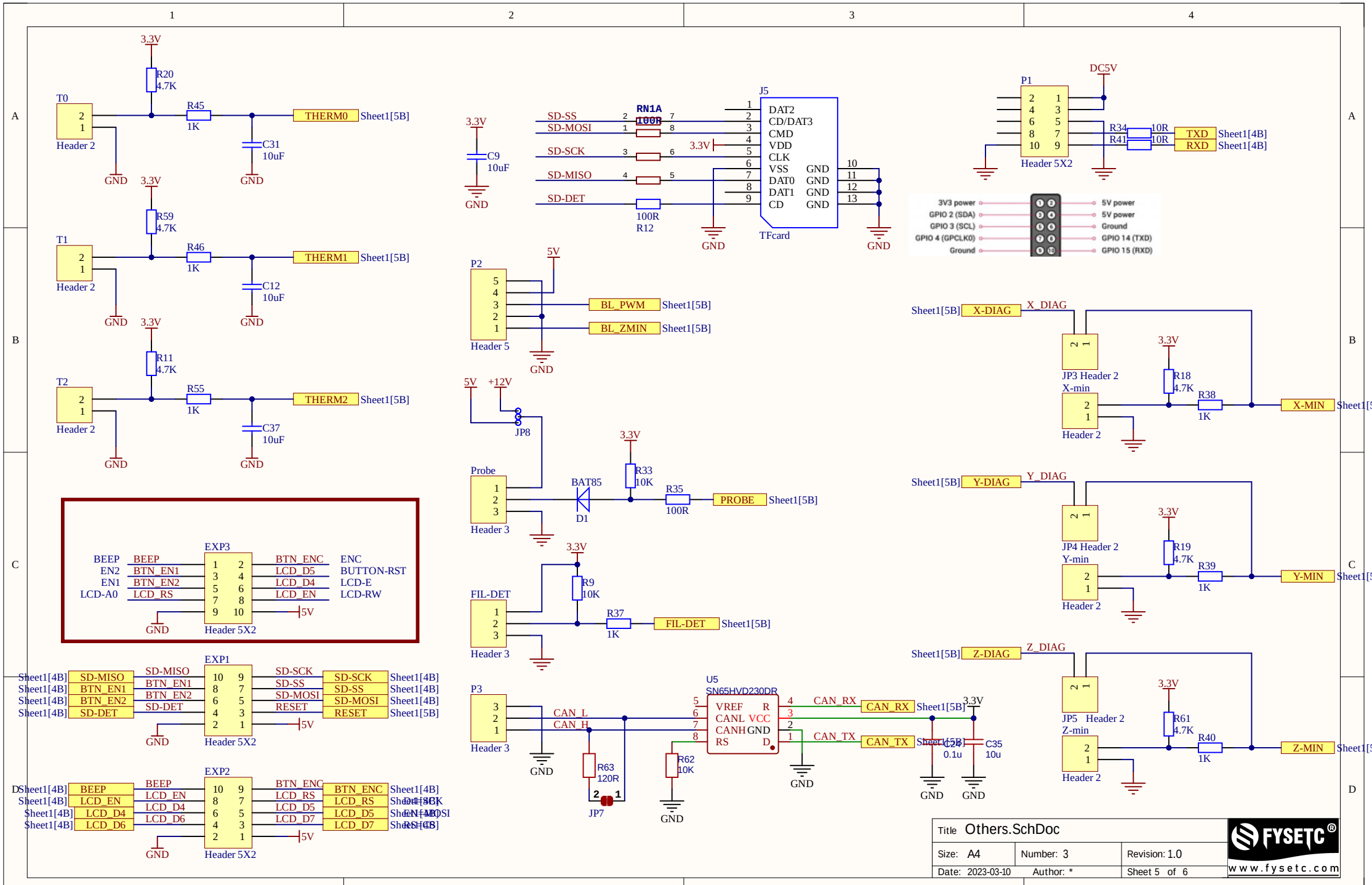
T0
Header 2
R20
4.7K
R45
1K
C31
10uF
THERM0
Sheet1[5B]
T1
Header 2
R59
4.7K
R46
1K
C12
10uF
THERM1
Sheet1[5B]
T2
Header 2
R11
4.7K
R55
1K
C37
10uF
THERM2
Sheet1[5B]
3.3V
GND
EXP3
Header 5X2
BEEP
EN2
EN1
LCD-A0
BTN_EN1
BTN_EN2
LCD_RS
BTN_ENC
LCD_D5
LCD_D4
LCD_EN
ENC
BUTTON-RST
LCD-E
LCD-RW
5V
EXP1
Header 5X2
SD-MISO
BTN_EN1
BTN_EN2
SD-DET
SD-SCK
SD-SS
SD-MOSI
RESET
Sheet1[4B]
Sheet1[5B]
EXP2
Header 5X2
BEEP
LCD_EN
LCD_D4
LCD_D6
BTN_ENC
LCD_RS
LCD_D5
LCD_D7
C9
10uF
RN1A
100R
SD-SS
SD-MOSI
SD-SCK
SD-MISO
SD-DET
100R
R12
J5
TFcard
DAT2
CD/DAT3
CMD
VDD
CLK
VSS
DAT0
DAT1
CD
GND
P1
Header 5X2
DC5V
R34
R41
10R
TXD
RXD
3V3 power
GPIO 2 (SDA)
GPIO 3 (SCL)
GPIO 4 (GPCLK0)
Ground
5V power
GPIO 14 (TXD)
GPIO 15 (RXD)
P2
Header 5
BL_PWM
BL_ZMIN
JP8
Probe
Header 3
BAT85
D1
R33
10K
R35
100R
PROBE
FIL-DET
R9
10K
R37
1K
P3
Header 3
CAN_L
CAN_H
R63
120R
JP7
R62
10K
U5
SN65HVD230DR
VREF
CANL
CANH
RS
R
VCC
GND
D
CAN_RX
CAN_TX
C28
0.1u
C35
10u
X-DIAG
X_DIAG
JP3 Header 2
X-min
R18
4.7K
R38
1K
X-MIN
Y-DIAG
Y_DIAG
JP4 Header 2
Y-min
R19
4.7K
R39
1K
Y-MIN
Z-DIAG
Z_DIAG
JP5 Header 2
Z-min
R61
4.7K
R40
1K
Z-MIN
Title Others.SchDoc
Size: A4
Number: 3
Revision: 1.0
Date: 2023-03-10
Author: *
Sheet 5 of 6
FYSETC
www.fysetc.com

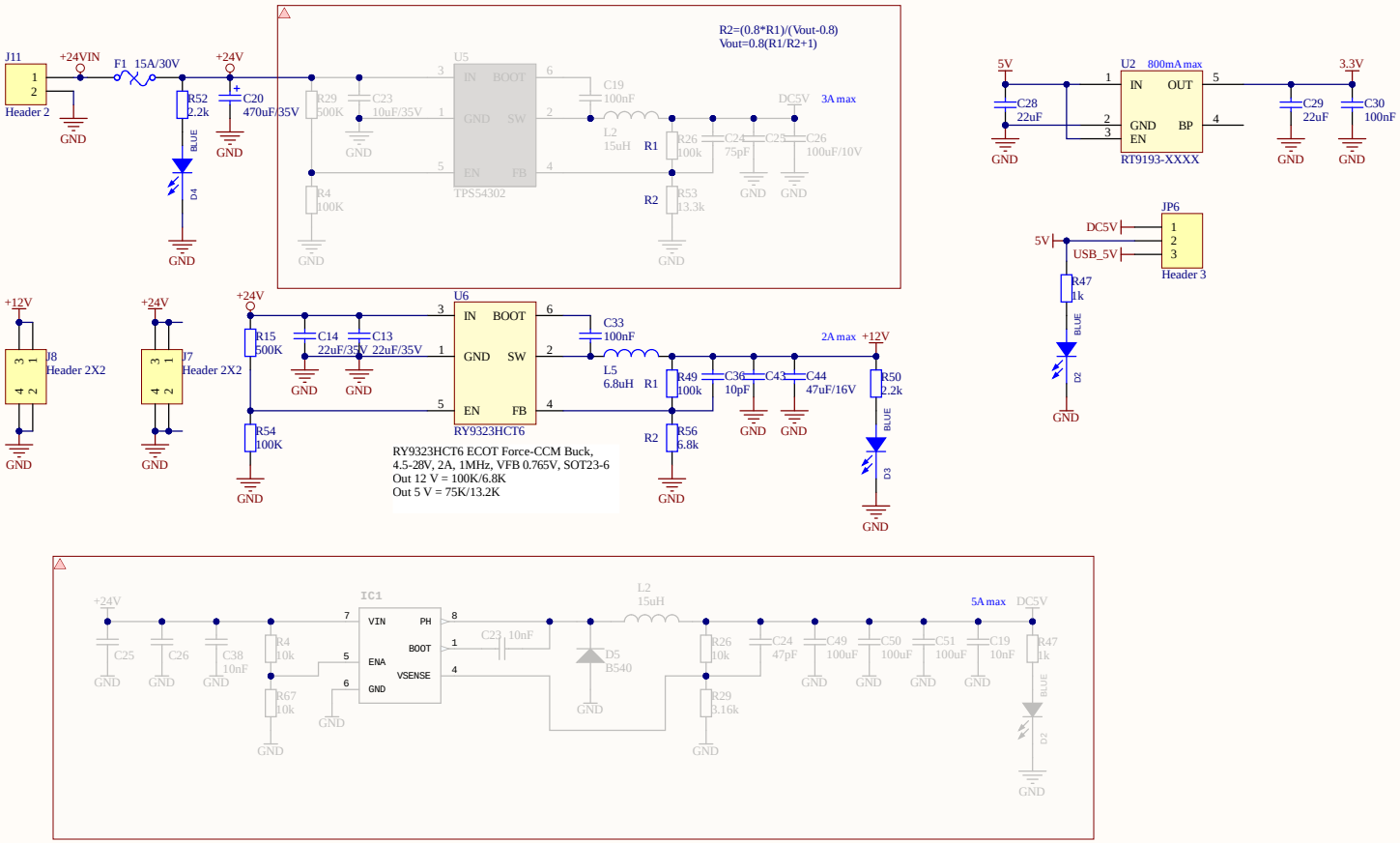

Title	Power.SchDoc	
Size: A3	Number: 4	Revision: 1.0
Date: 2023-03-10	Author: *	Sheet 6 of 6

FYSETC®
www.fysetc.com