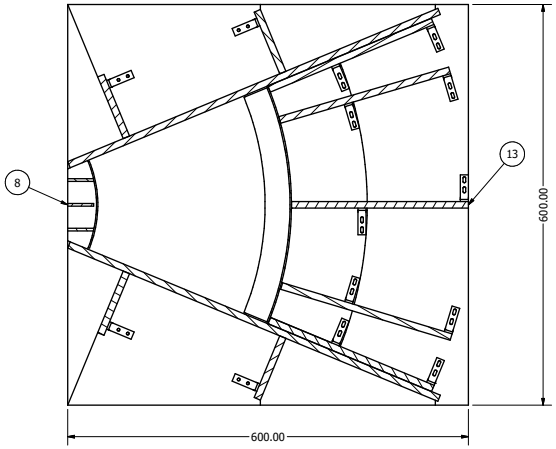

SECTION A-A
SCALE 1 / 4

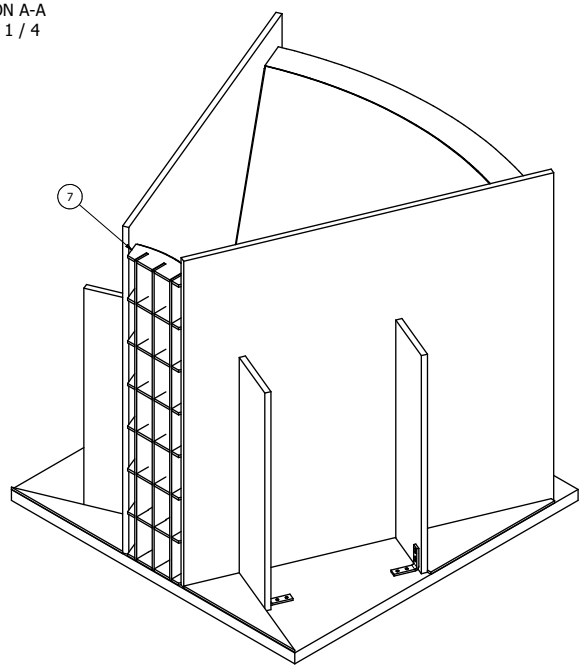

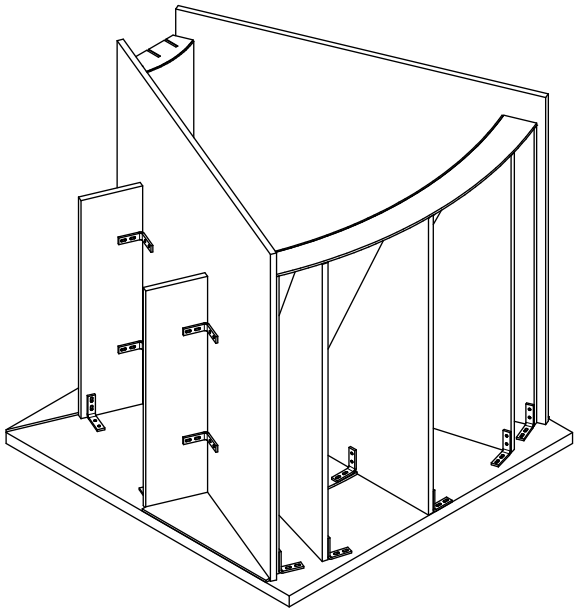

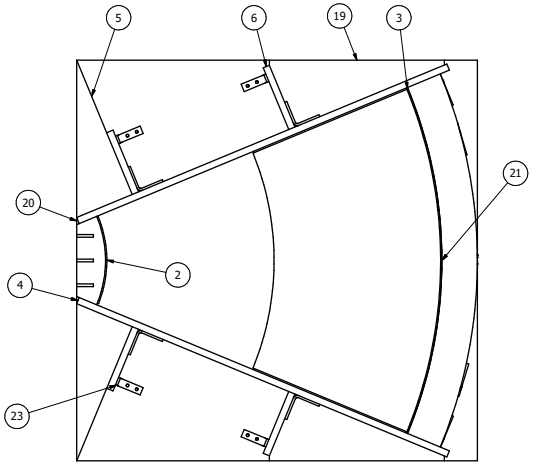

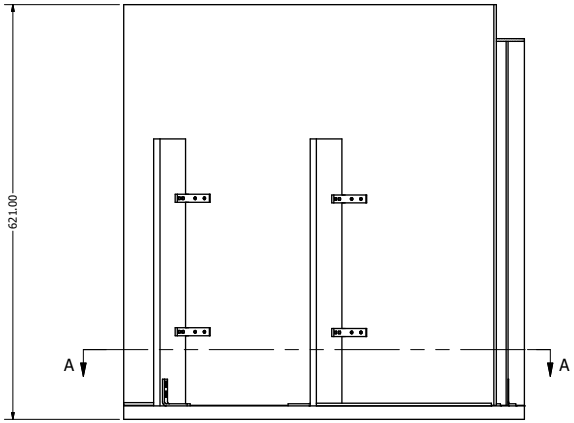

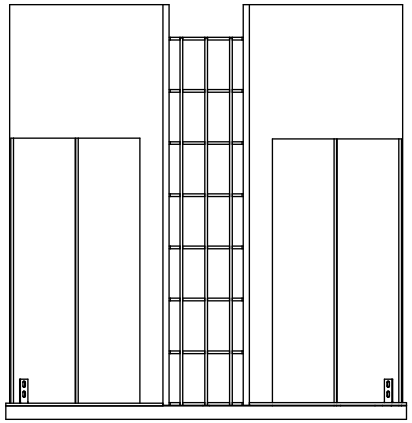

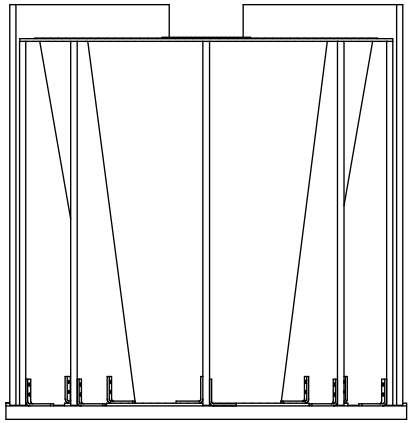

PARTS LIST			
ITEM	QTY	PART NUMBER	DESCRIPTION
2	1	front panel	Flexible PVC 2mm
3	1	rear panel	Flexible PVC 2mm
4	2	base1	
5	2	ref1	
6	4	support1	
7	8	frontformer	MultiLayer 4mm
8	3	verticalff	
13	5	verticalff1	
19	2	ref3	
20	1	base	
21	1	externalSupportRear1	
22	1	externalSupportRear3	
23	264,000 mm	JIS G 3350C - 3075 40x40-12	Light angle channel steel

DRAWN Giancarlo	11/01/2019	FABLAB Torino
CHECKED		TITLE
QA		La Panca - Flowaer Vase
MFG		
APPROVED		
		SIZE A1 / DWG NO ExternalMoldAssembly / REV
		SCALE 1 / 4 / SHEET 1 OF 4