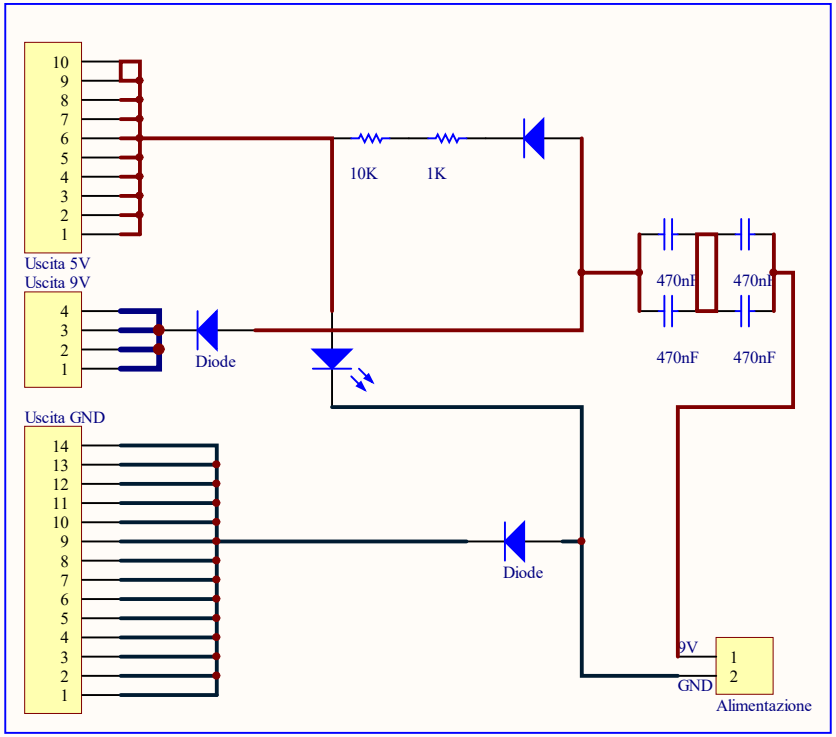

Title		
Size A4	Number	Revision
Date: 30/01/2020		Sheet of
File: D:\SyncFiles\..\Alimentazione.SchDoc		Drawn By: