ATmega328p

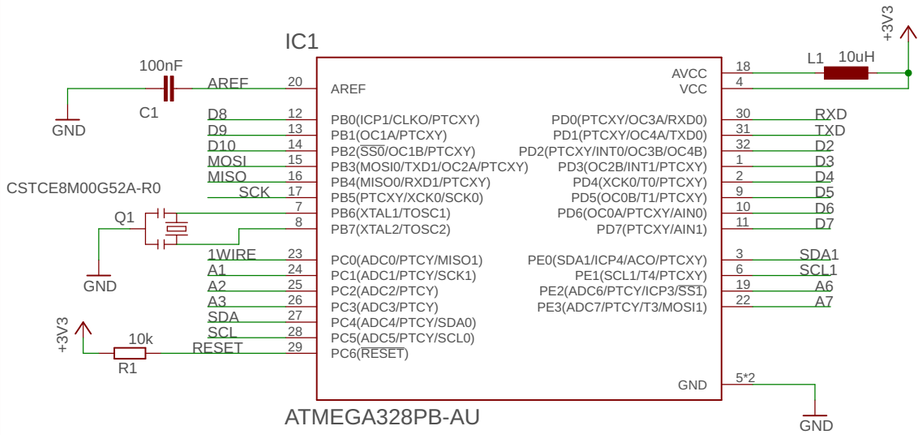

Resistors, Capacitors

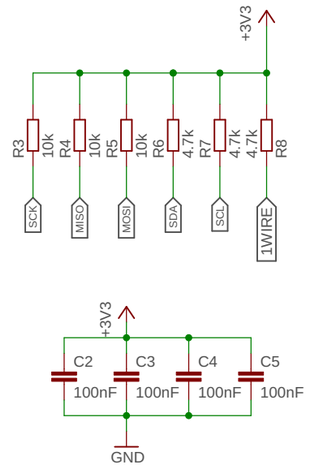

RS485

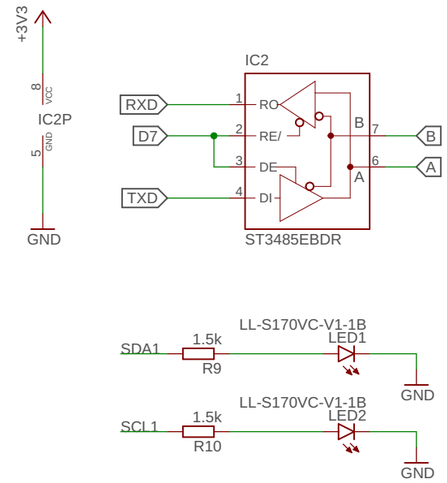

EEPROM

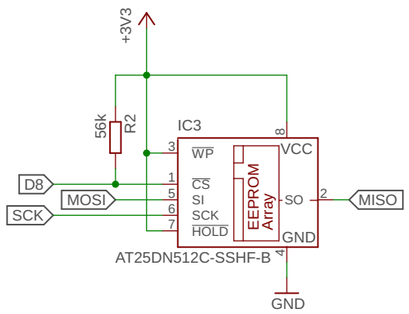

ESD Protection

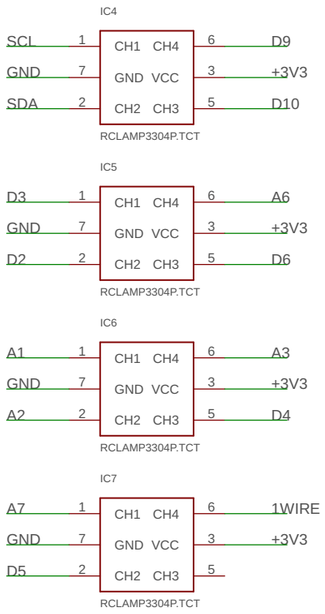

I/O

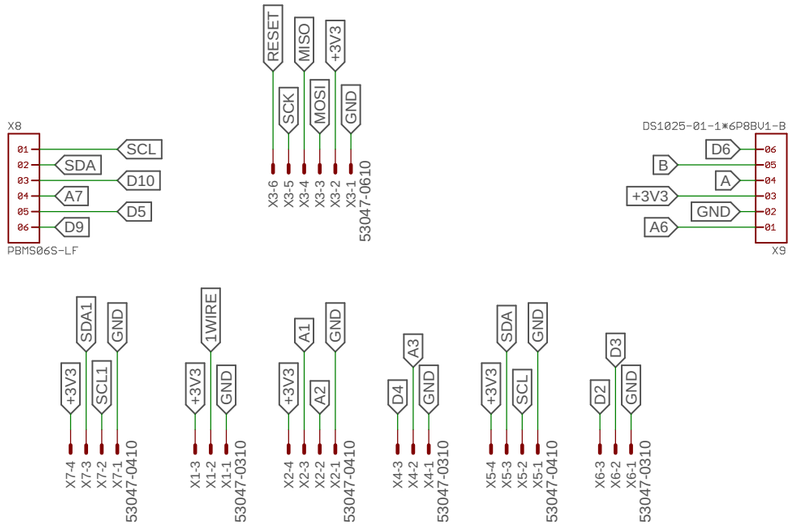

domatic.org

GetWired MCU v1.0

2020-05-13 14:50

Sheet: 1/1