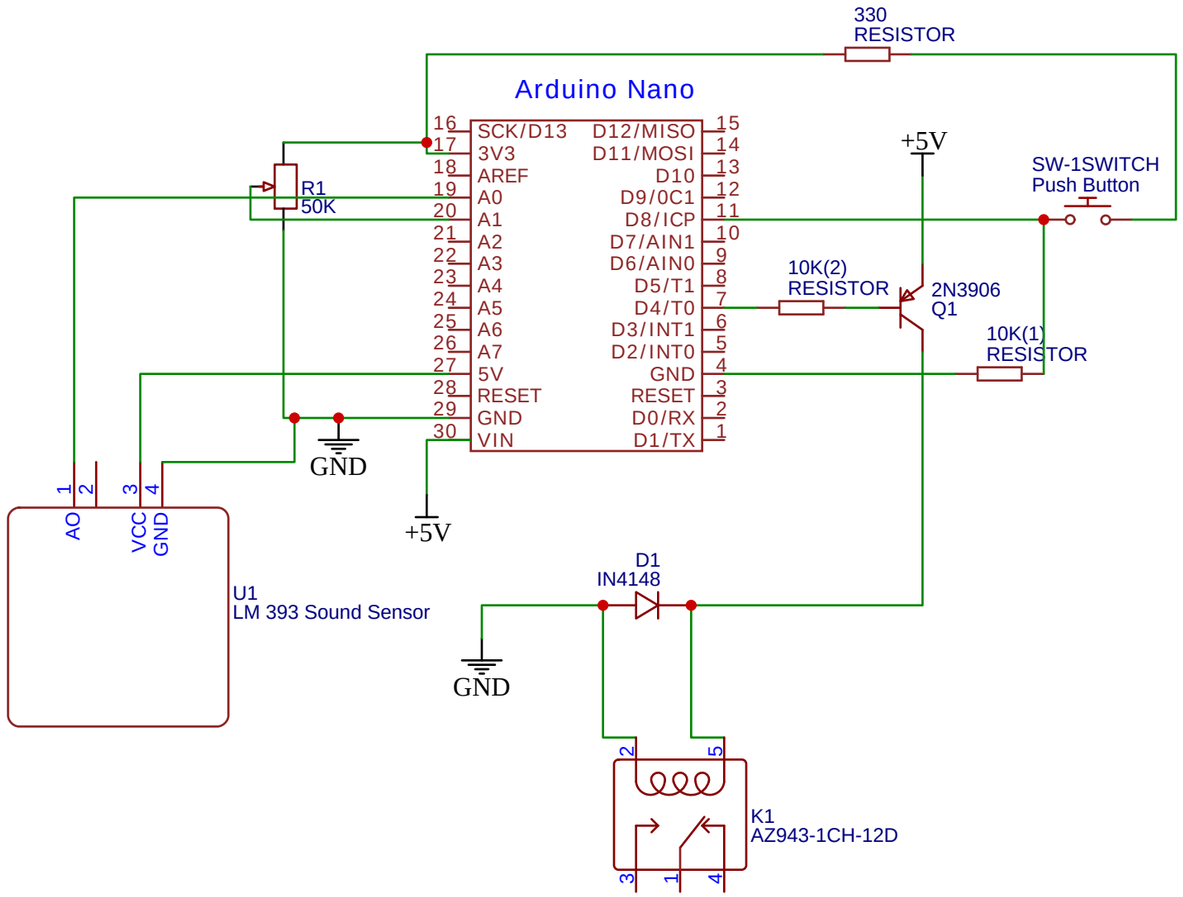

TITLE: Clap sequence sensor schematic		REV: 1.0
EasyEDA	Company: Aditya Nair	Sheet: 1/1
	Date: 2021-06-01 Drawn By:	