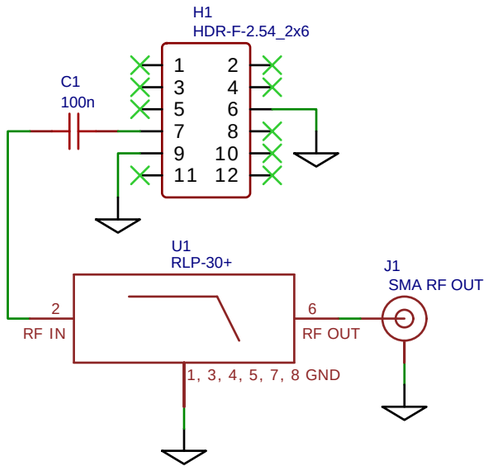

TITLE: rpitx-coax-pcb		REV: 1.0
EasyEDA	Company: https://github.com/IgrikXD	Sheet: 1/1
	Date: 2021-02-26 Drawn By: IgrikXD	