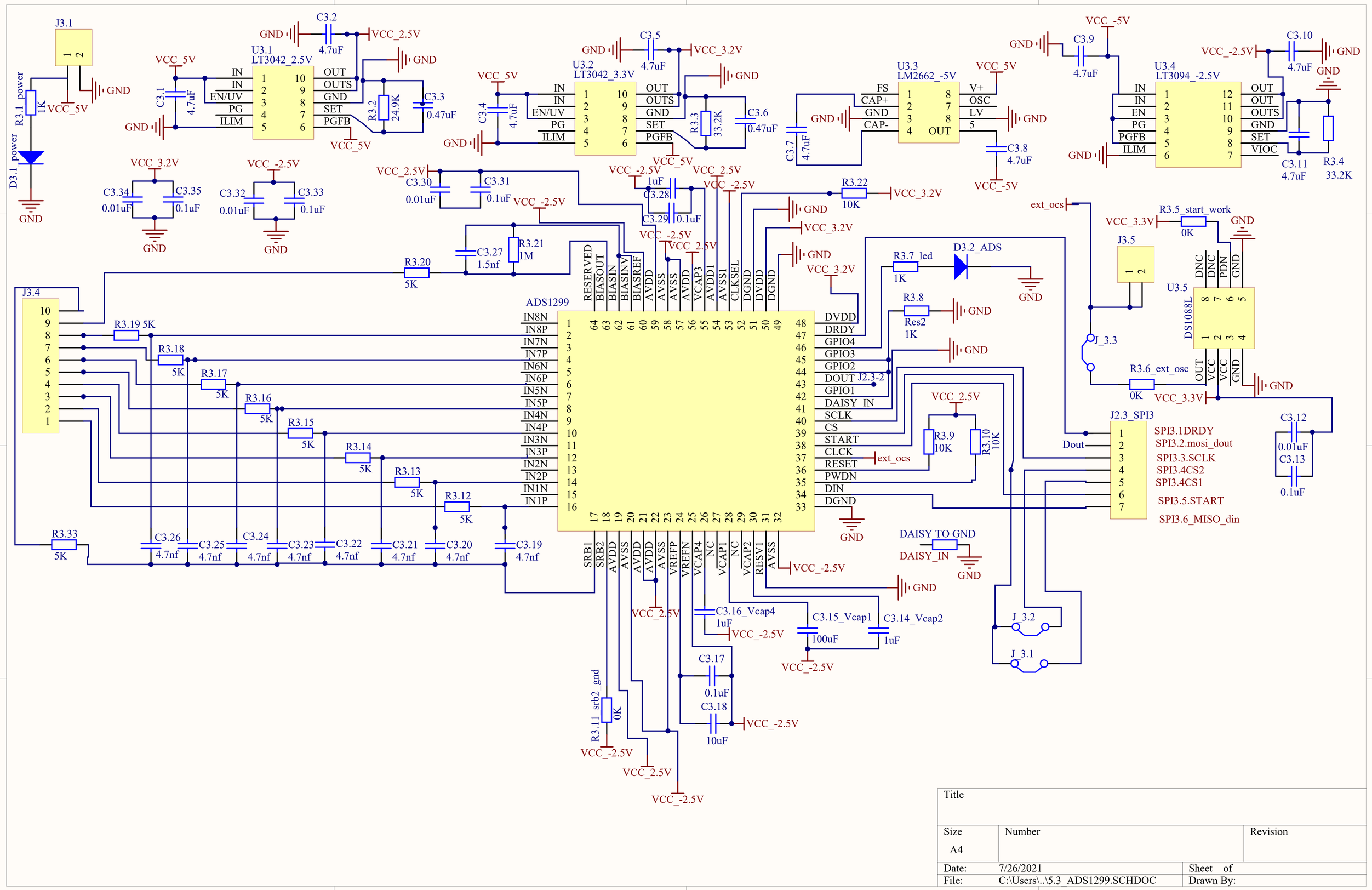

Title		
Size A4	Number	Revision
Date: 7/26/2021		Sheet of
File: C:\Users\..\5.3_ADS1299.SCHDOC		Drawn By: