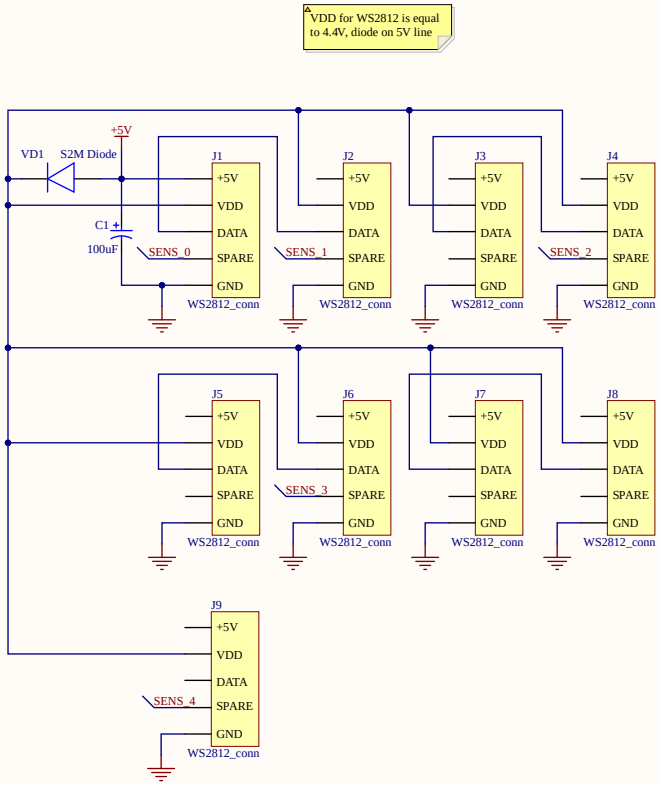

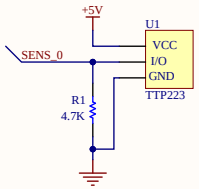

Title		
Size A3	Number	Revision
Date: 8-15-2022	Sheet of	
File: C:\Users\..\HAQuDA_upper_PCB_schematic.SchDoc	Drawn By:	