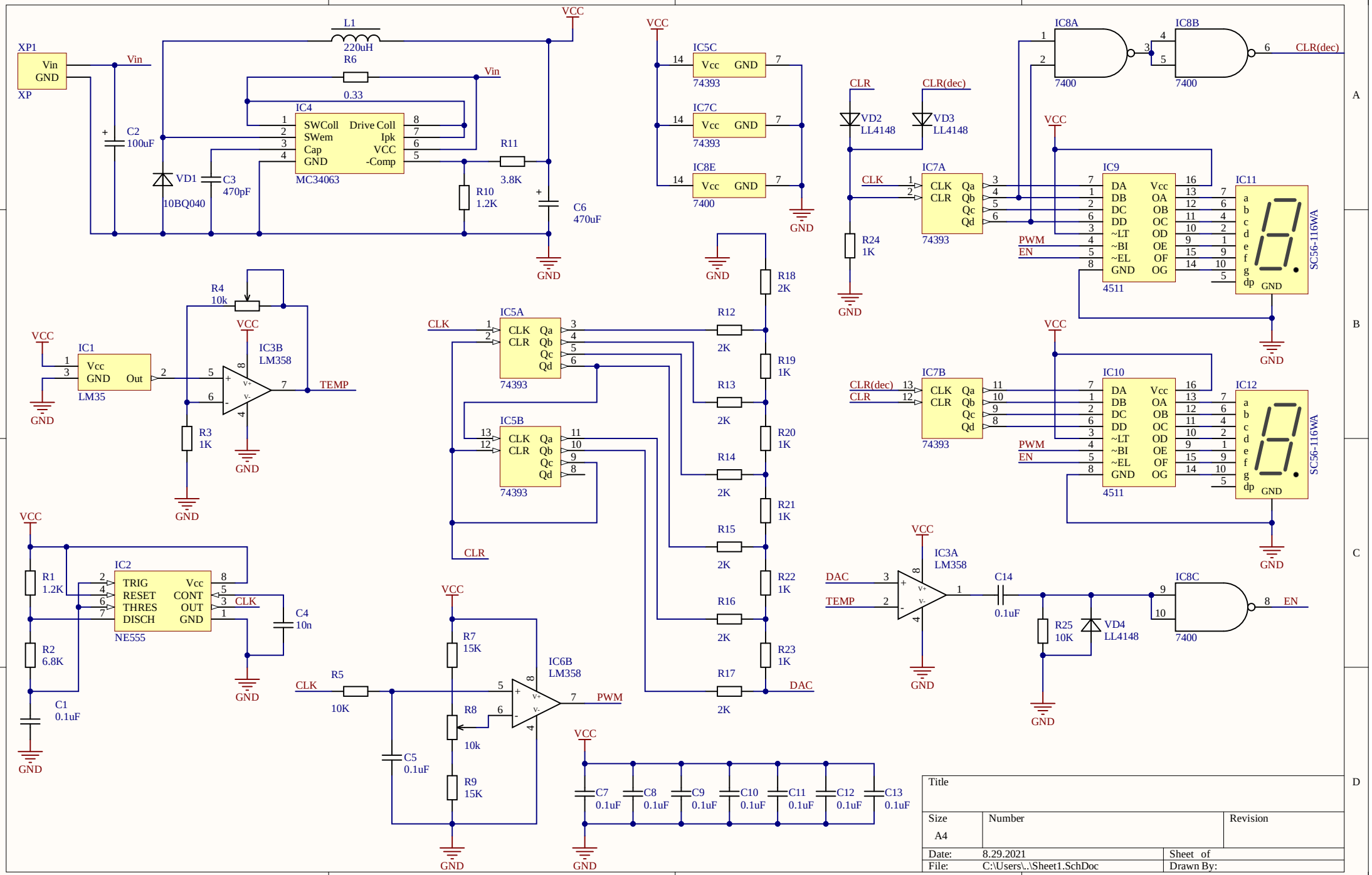

Title		
Size A4	Number	Revision
Date: 8.29.2021		Sheet of
File: C:\Users\..\Sheet1.SchDoc		Drawn By: