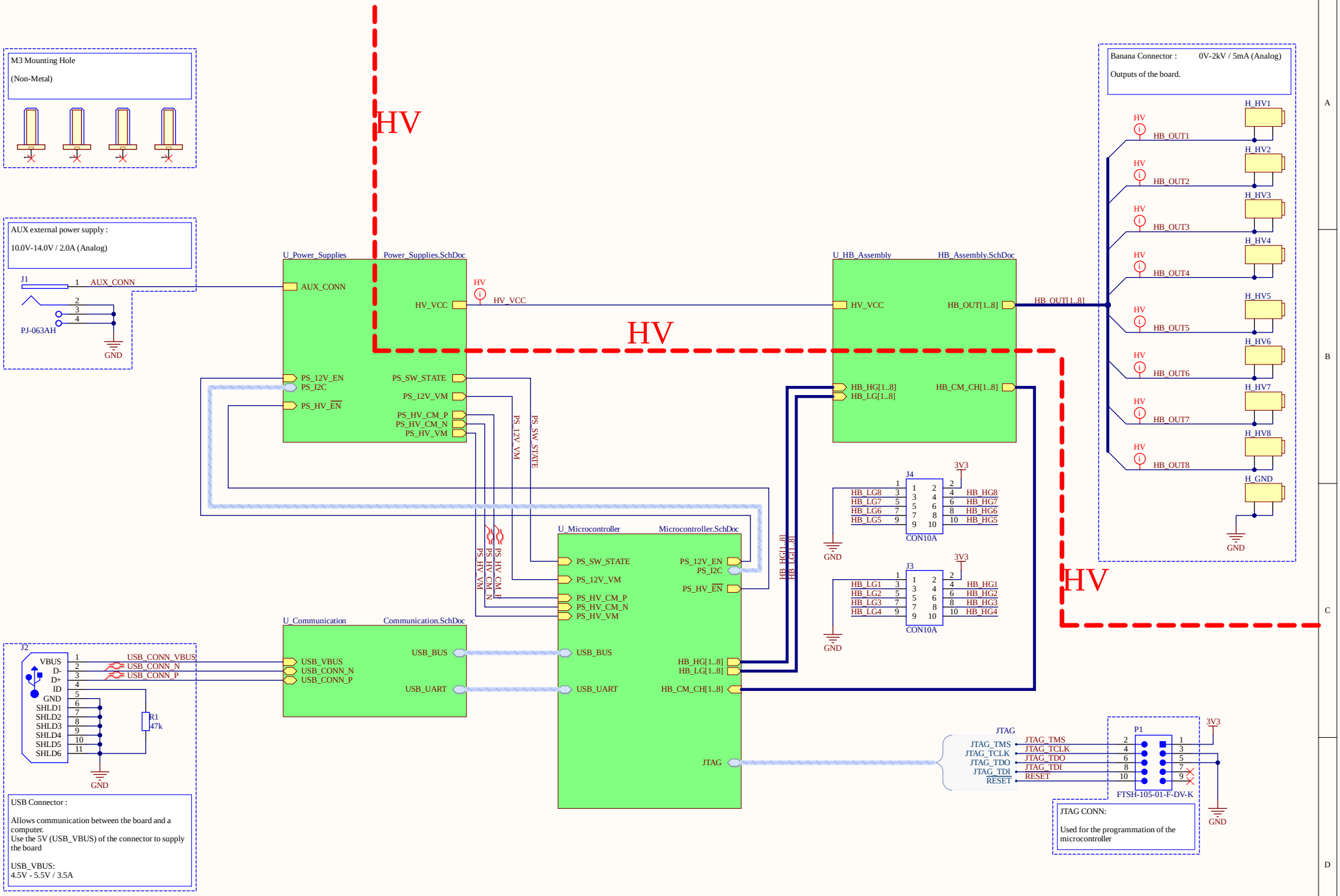

Title	ochvps_v1.0.PrjPcb		
Title	main.SchDoc		
Size: A3	Number:*	Revision:*	
Date: 21/03/2024	Time: 07:57:05	Sheet 1 of 10	

MBE
EPFL STI IMT LMTS
Rue de la Maladière 71b
2000 Neuchâtel
Switzerland

EPFL

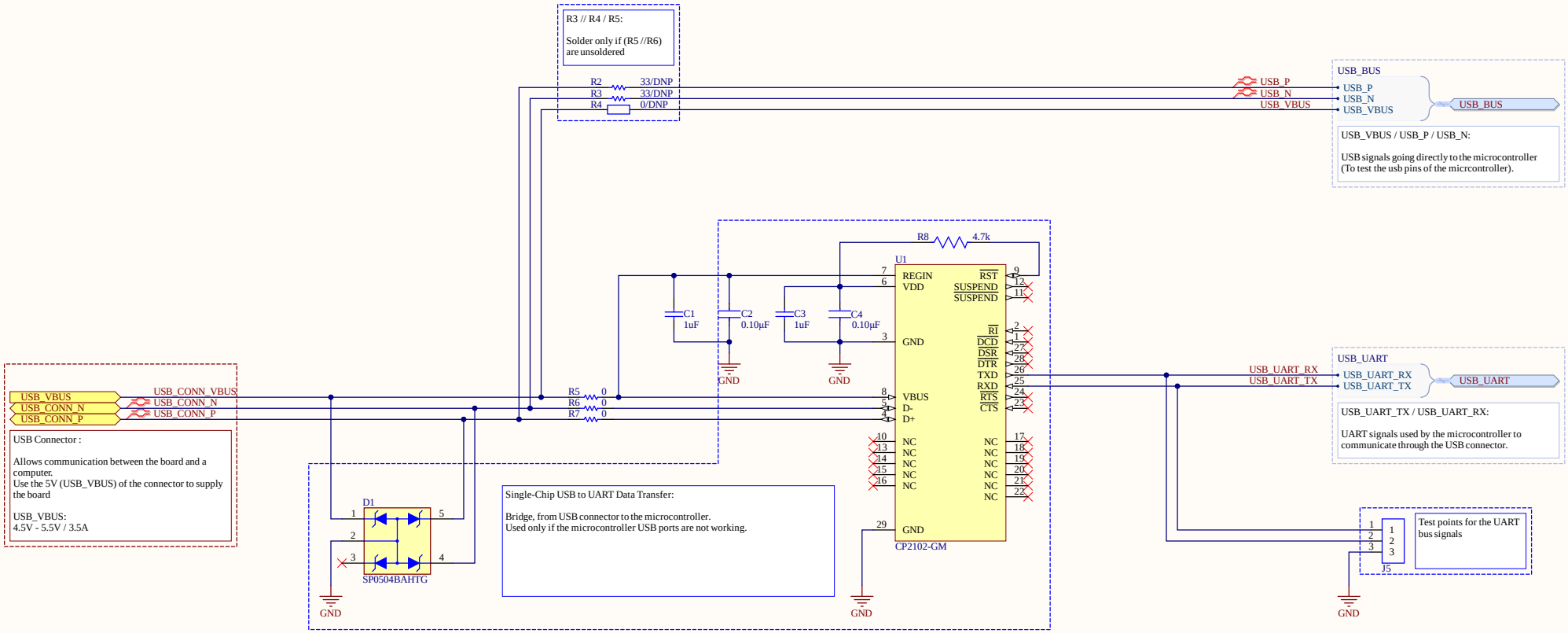

Title	*ochvps_v1.0.PrjPcb*		
Title	*Communication.SchDoc*		
Size: A3	Number:*	Revision:*	
Date: 21/03/2024	Time: 07:57:05	Sheet 2 of 10	

MBE
EPFL STI IMT LMTS
Rue de la Maladière 71b
2000 Neuchâtel
Switzerland

EPFL

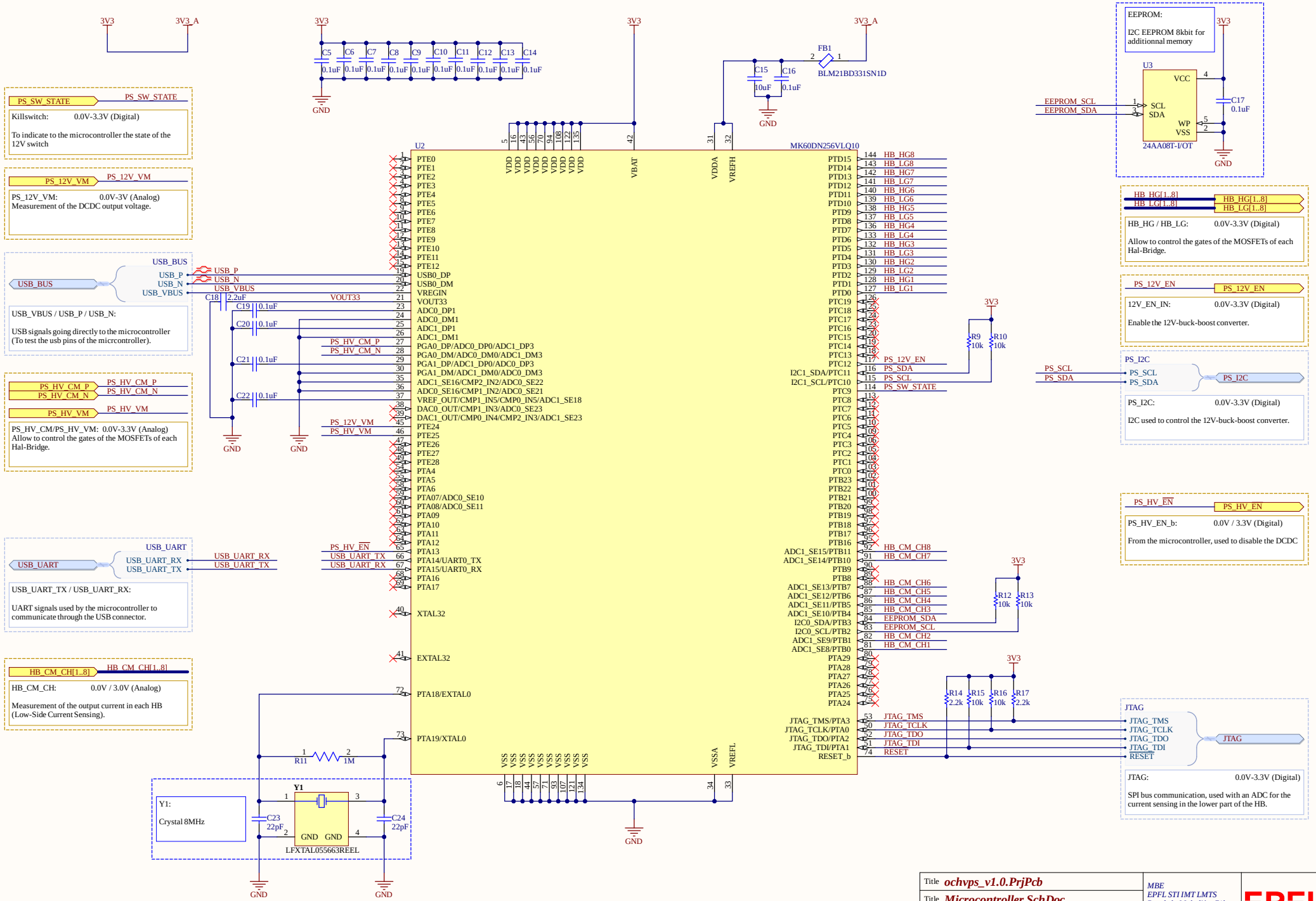
3V3
3V3_A
C5 C6 C7 C8 C9 C10 C11 C12 C13 C14
0.1uF
GND
FB1
BLM21BD331SN1D
C15 10uF
C16 0.1uF
EEPROM:
I2C EEPROM 8kbit for additionnal memory
U3
VCC
SCL
SDA
WP
VSS
24AA08T-I/OT
C17 0.1uF
EEPROM_SCL
EEPROM_SDA
PS_SW_STATE
Killswitch: 0.0V-3.3V (Digital)
To indicate to the microcontroller the state of the 12V switch
PS_12V_VM
PS_12V_VM: 0.0V-3V (Analog)
Measurement of the DCDC output voltage.
USB_BUS
USB_P
USB_N
USB_VBUS
USB_BUS / USB_P / USB_N:
USB signals going directly to the microcontroller (To test the usb pins of the micrcontroller).
C18 2.2uF
C19 0.1uF
C20 0.1uF
C21 0.1uF
C22 0.1uF
VOUT33
PS_HV_CM_P
PS_HV_CM_N
PS_HV_VM
PS_HV_CM/PS_HV_VM: 0.0V-3.3V (Analog)
Allow to control the gates of the MOSFETs of each Hal-Bridge.
USB_UART
USB_UART_RX
USB_UART_TX
USB_UART_TX / USB_UART_RX:
UART signals used by the microcontroller to communicate through the USB connector.
HB_CM_CH[1..8]
HB_CM_CH: 0.0V / 3.0V (Analog)
Measurement of the output current in each HB (Low-Side Current Sensing).
R11 1M
Y1
Y1:
Crystal 8MHz
C23 22pF
C24 22pF
GND GND
LFXTAL055663REEL
U2
MK60DN256VLQ10
PTE0
PTE1
PTE2
PTE3
PTE4
PTE5
PTE6
PTE7
PTE8
PTE9
PTE10
PTE11
PTE12
USB0_DP
USB0_DM
VREGIN
VOUT33
ADC0_DP1
ADC0_DM1
ADC1_DP1
ADC1_DM1
PGA0_DP/ADC0_DP0/ADC1_DP3
PGA0_DM/ADC0_DM0/ADC1_DM3
PGA1_DP/ADC1_DP0/ADC0_DP3
PGA1_DM/ADC1_DM0/ADC0_DM3
ADC1_SE16/CMP2_IN2/ADC0_SE22
ADC0_SE16/CMP1_IN2/ADC0_SE21
VREF_OUT/CMP1_IN5/CMP0_IN5/ADC1_SE18
DAC0_OUT/CMP1_IN3/ADC0_SE23
DAC1_OUT/CMP0_IN4/CMP2_IN3/ADC1_SE23
PTE24
PTE25
PTE26
PTE27
PTE28
PTA4
PTA5
PTA6
PTA07/ADC0_SE10
PTA08/ADC0_SE11
PTA09
PTA10
PTA11
PTA12
PTA13
PTA14/UART0_TX
PTA15/UART0_RX
PTA16
PTA17
XTAL32
EXTAL32
PTA18/EXTAL0
PTA19/XTAL0
VDD
VBAT
VDDA
VREFH
VSS
VSSA
VREFL
PTD15 HB_HG8
PTD14 HB_LG8
PTD13 HB_HG7
PTD12 HB_LG7
PTD11 HB_HG6
PTD10 HB_LG6
PTD9 HB_HG5
PTD8 HB_LG5
PTD7 HB_HG4
PTD6 HB_LG4
PTD5 HB_HG3
PTD4 HB_LG3
PTD3 HB_HG2
PTD2 HB_LG2
PTD1 HB_HG1
PTD0 HB_LG1
PTC19
PTC18
PTC17
PTC16
PTC15
PTC14
PTC13 PS_12V_EN
PTC12 PS_SDA
I2C1_SDA/PTC11 PS_SCL
I2C1_SCL/PTC10 PS_SW_STATE
PTC9
PTC8
PTC7
PTC6
PTC5
PTC4
PTC3
PTC2
PTC1
PTC0
PTB23
PTB22
PTB21
PTB20
PTB19
PTB18
PTB17
PTB16 HB_CM_CH8
ADC1_SE15/PTB11 HB_CM_CH7
ADC1_SE14/PTB10
PTB9
PTB8
ADC1_SE13/PTB7 HB_CM_CH6
ADC1_SE12/PTB6 HB_CM_CH5
ADC1_SE11/PTB5 HB_CM_CH4
ADC1_SE10/PTB4 HB_CM_CH3
I2C0_SDA/PTB3 EEPROM_SDA
I2C0_SCL/PTB2 EEPROM_SCL
ADC1_SE9/PTB1 HB_CM_CH2
ADC1_SE8/PTB0 HB_CM_CH1
PTA29
PTA28
PTA27
PTA26
PTA25
PTA24
JTAG_TMS/PTA3 JTAG_TMS
JTAG_TCLK/PTA0 JTAG_TCLK
JTAG_TDO/PTA2 JTAG_TDO
JTAG_TDI/PTA1 JTAG_TDI
RESET_b RESET
R9 10k
R10 10k
R12 10k
R13 10k
R14 2.2k
R15 10k
R16 10k
R17 2.2k
HB_HG[1..8]
HB_LG[1..8]
HB_HG / HB_LG: 0.0V-3.3V (Digital)
Allow to control the gates of the MOSFETs of each Hal-Bridge.
PS_12V_EN
12V_EN_IN: 0.0V-3.3V (Digital)
Enable the 12V-buck-boost converter.
PS_I2C
PS_SCL
PS_SDA
PS_I2C: 0.0V-3.3V (Digital)
I2C used to control the 12V-buck-boost converter.
PS_HV_EN
PS_HV_EN_b: 0.0V / 3.3V (Digital)
From the microcontroller, used to disable the DCDC
JTAG
JTAG_TMS
JTAG_TCLK
JTAG_TDO
JTAG_TDI
RESET
JTAG: 0.0V-3.3V (Digital)
SPI bus communication, used with an ADC for the current sensing in the lower part of the HB.
Title ochvps_v1.0.PrjPcb
Title Microcontroller.SchDoc
Size: A3
Number:*
Revision:*
Date: 21/03/2024
Time: 07:57:05
Sheet 3 of 10
MBE
EPFL STI IMT LMTS
Rue de la Maladière 71b
2000 Neuchâtel
Switzerland
EPFL

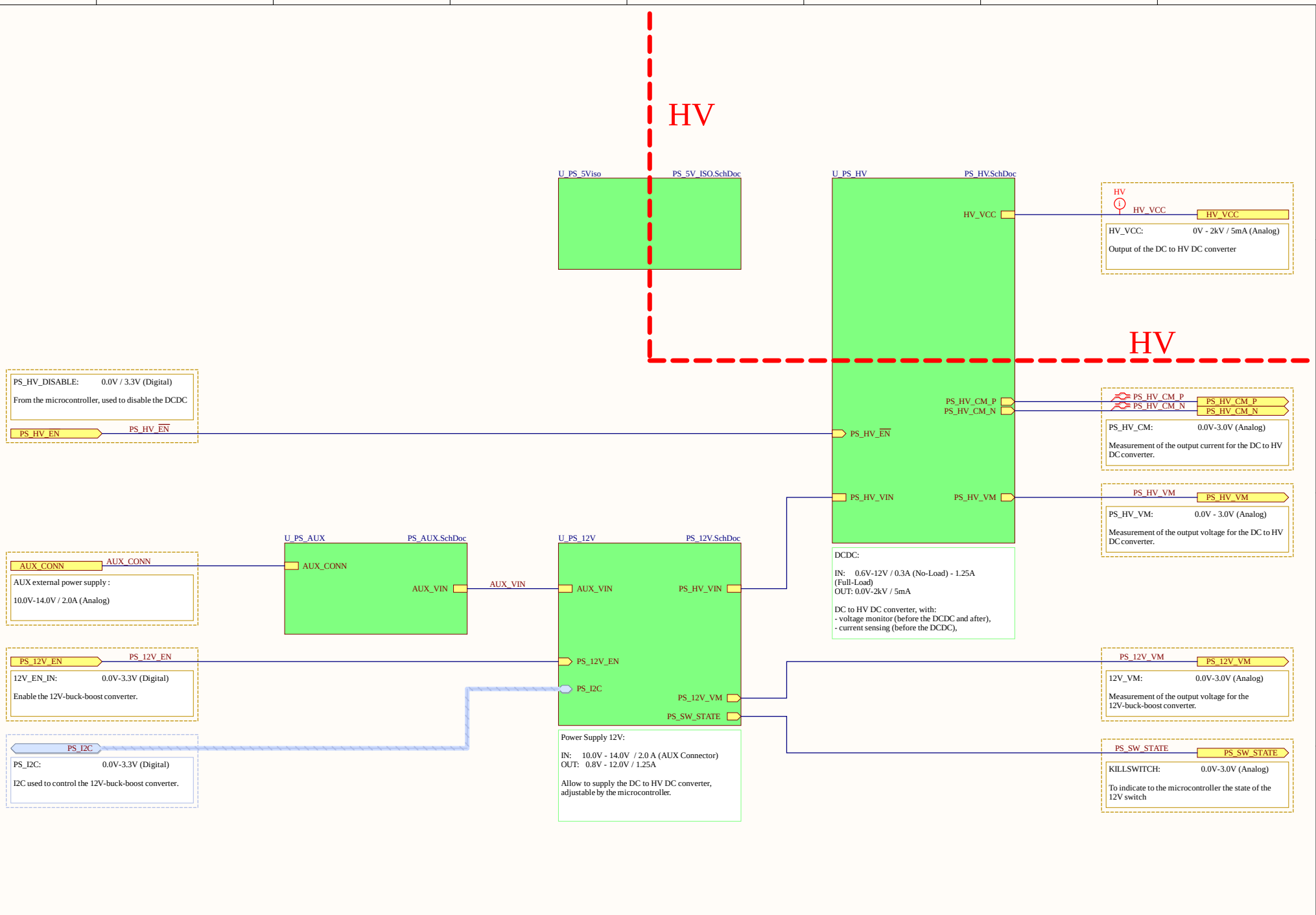

Title	ochvps_v1.0.PrjPcb		MBE EPFL STI IMT LMTS Rue de la Maladière 71b 2000 Neuchâtel Switzerland
Title	Power_Supplies.SchDoc		
Size: A3	Number:*	Revision:*	
Date: 21/03/2024	Time: 07:57:05	Sheet 4 of 10	

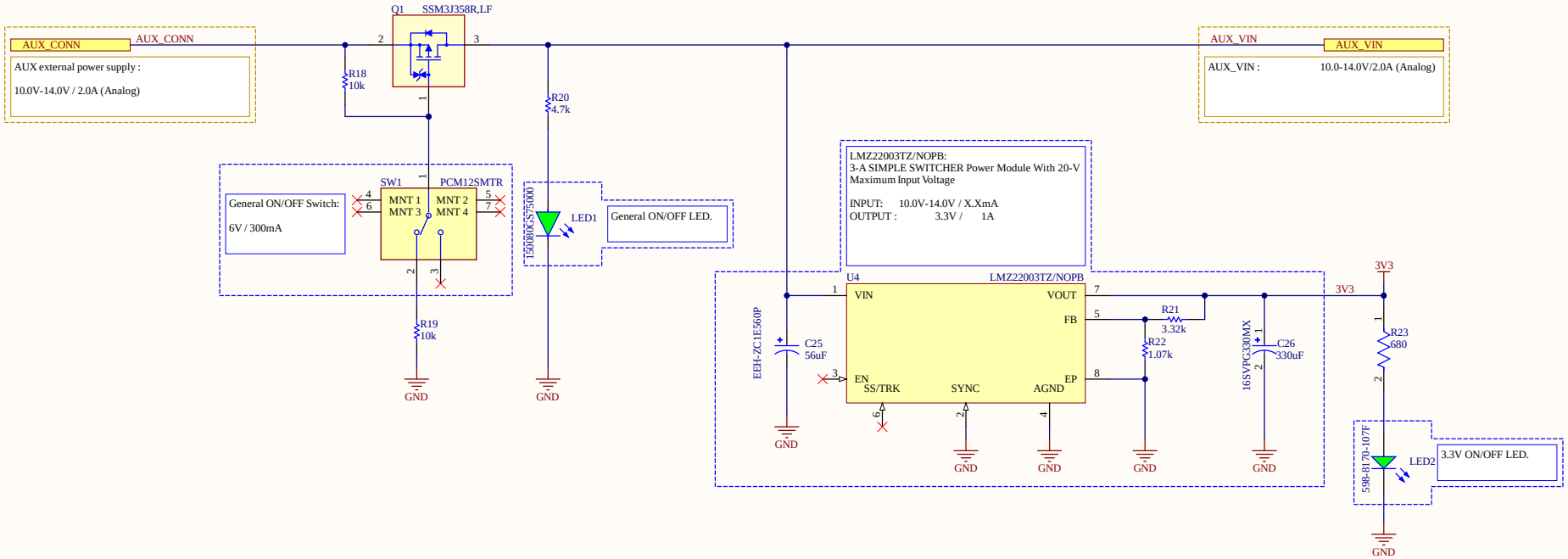

Title	*ochvps_v1.0.PrjPcb*		
Title	*PS_AUX.SchDoc*		
Size: A3	Number:*	Revision:*	
Date: 21/03/2024	Time: 07:57:05	Sheet 5 of 10	

MBE
EPFL STI IMT LMTS
Rue de la Maladière 71b
2000 Neuchâtel
Switzerland

EPFL

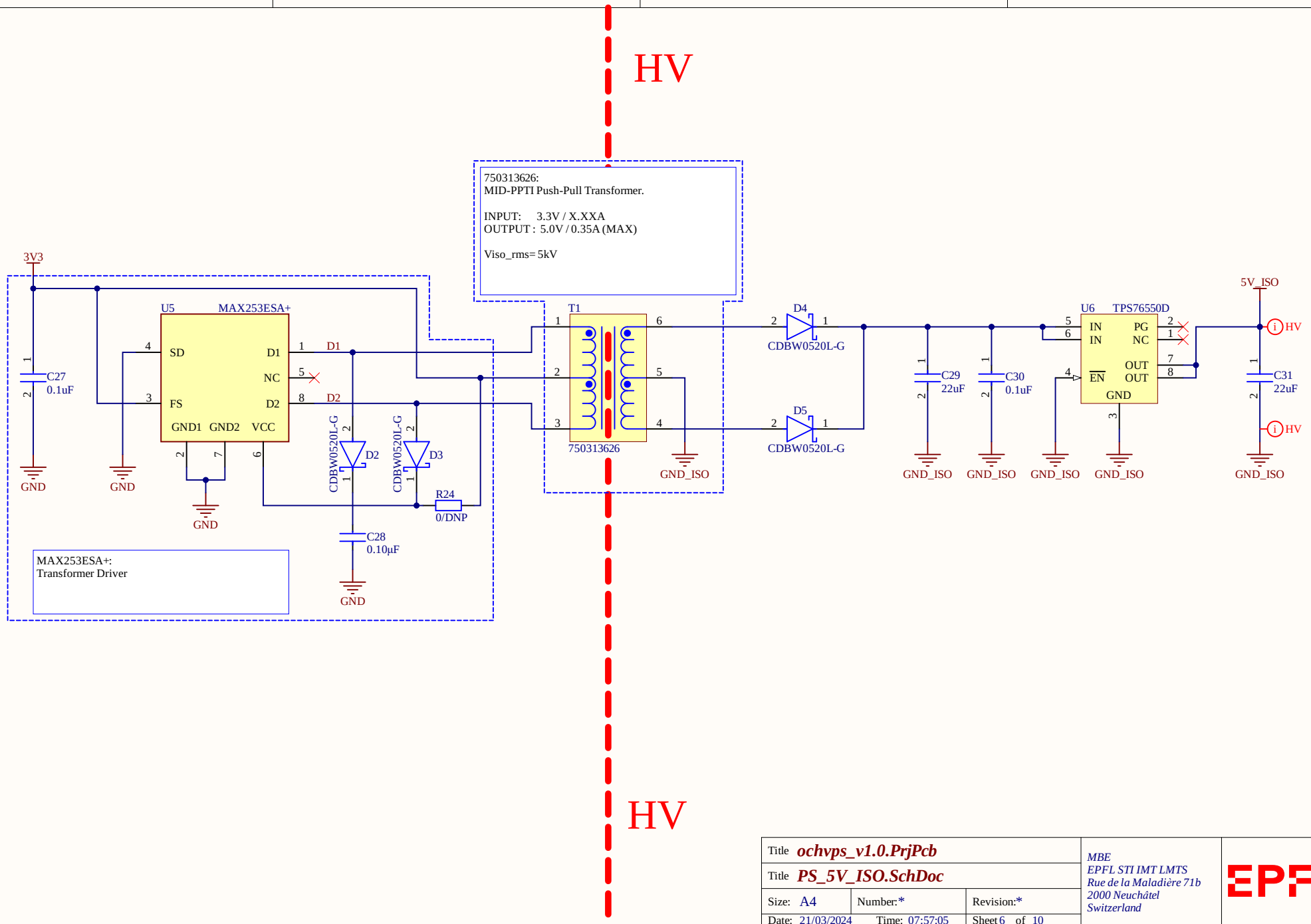

Title	ochvps_v1.0.PrjPcb		
Title	PS_5V_ISO.SchDoc		
Size: A4	Number:*	Revision:*	
Date: 21/03/2024	Time: 07:57:05	Sheet 6 of 10	

MBE
EPFL STI IMT LMTS
Rue de la Maladière 71b
2000 Neuchâtel
Switzerland

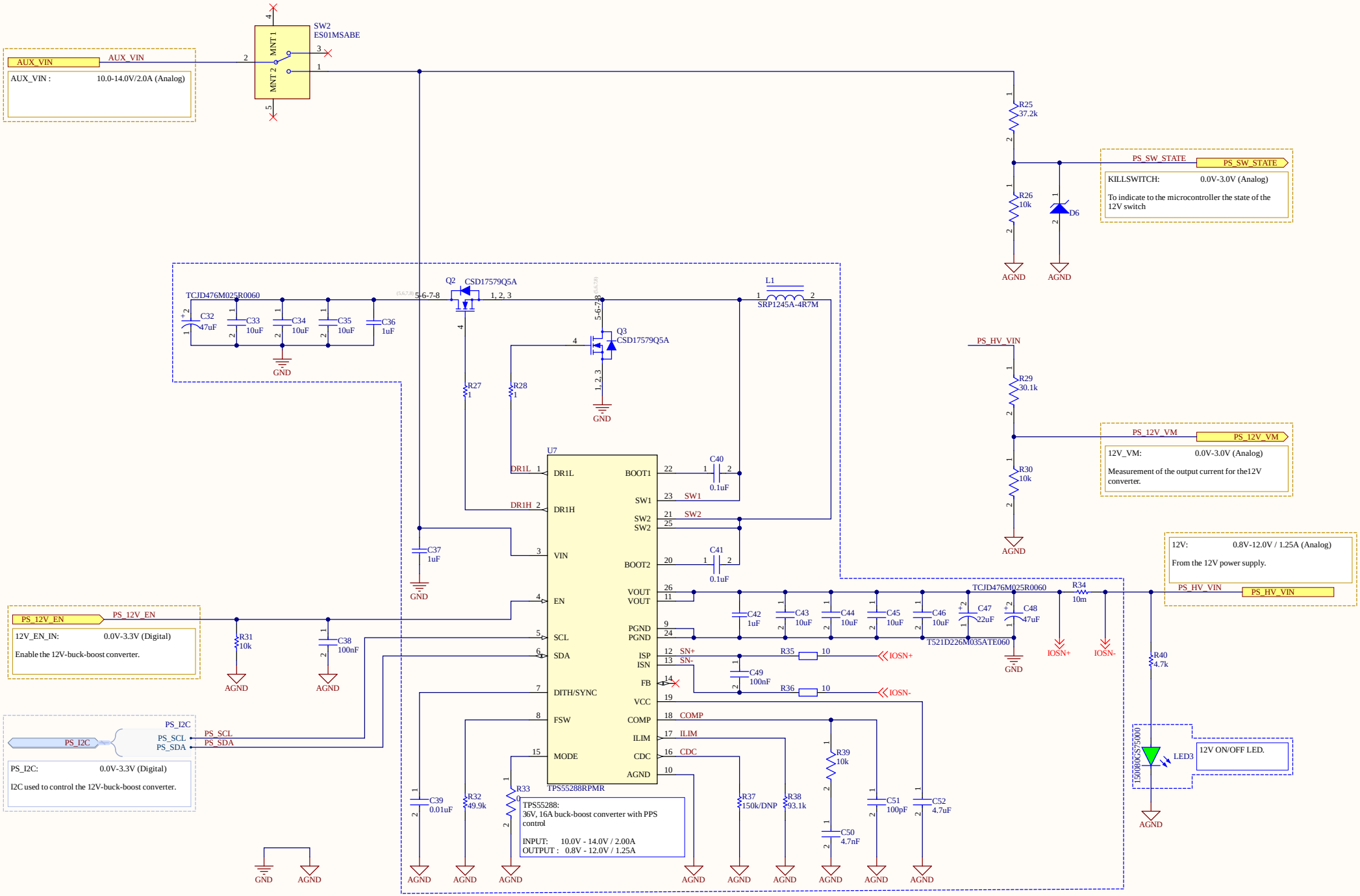

Title	ochvps_v1.0.PrjPcb	
Title	PS_12V.SchDoc	
Size: A3	Number:*	Revision:*
Date: 21/03/2024	Time: 07:57:05	Sheet 7 of 10

Mehdi Benbedda
EPFL STI IMT LMTS
Rue de la Maladière 71b
2000 Neuchâtel
Switzerland

EPFL

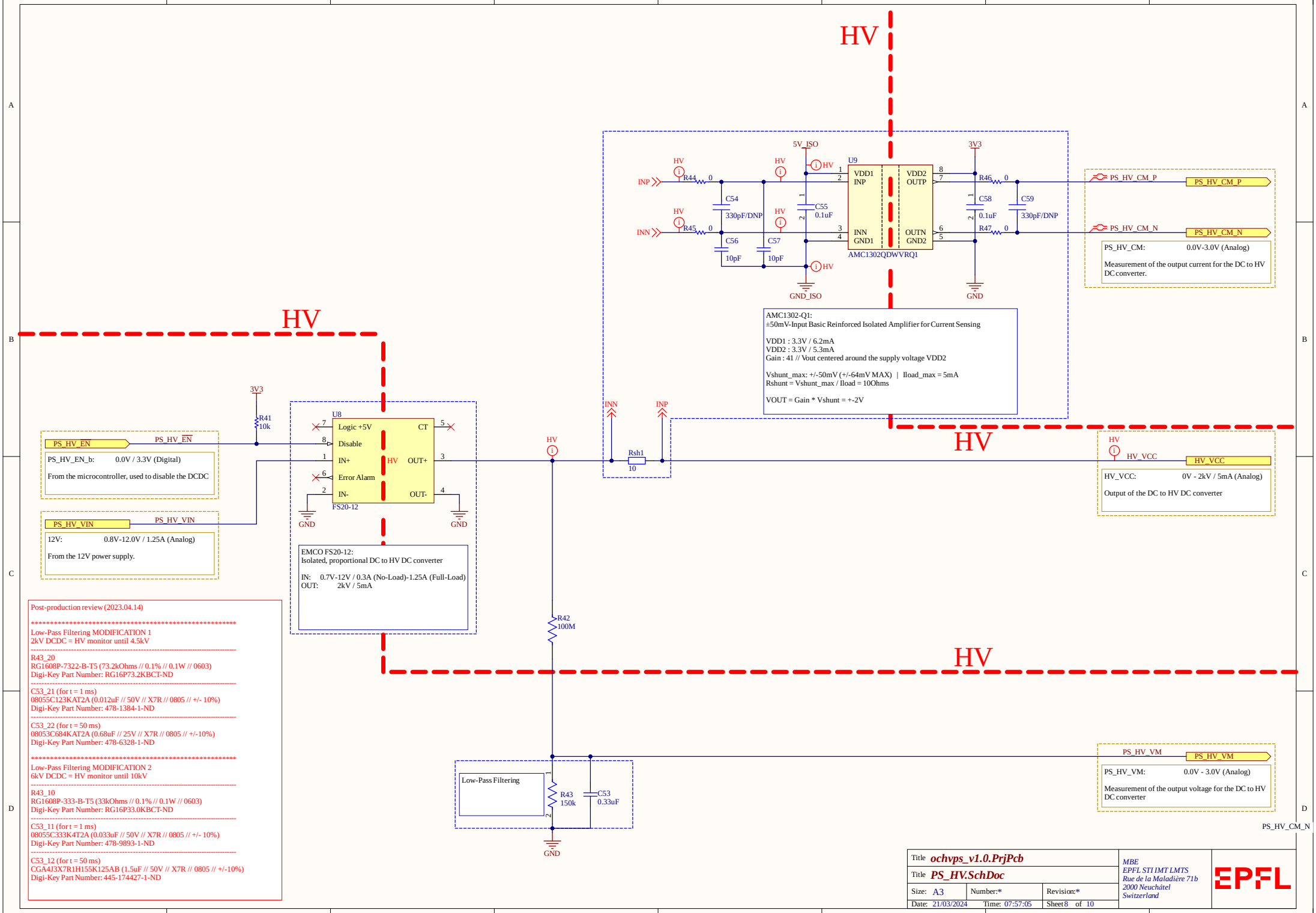
HV
5V_ISO
3V3
U9
VDD1
INP
INN
GND1
VDD2
OUTP
OUTN
GND2
AMC1302QDWVRQ1
INP
INN
R44
R45
R46
R47
C54
330pF/DNP
C55
0.1uF
C56
10pF
C57
10pF
C58
0.1uF
C59
330pF/DNP
GND_ISO
GND
PS_HV_CM_P
PS_HV_CM_N
PS_HV_CM:
0.0V-3.0V (Analog)
Measurement of the output current for the DC to HV DC converter.
AMC1302-Q1:
±50mV-Input Basic Reinforced Isolated Amplifier for Current Sensing
VDD1 : 3.3V / 6.2mA
VDD2 : 3.3V / 5.3mA
Gain : 41 // Vout centered around the supply voltage VDD2
Vshunt_max: +/-50mV (+/-64mV MAX) | Iload_max = 5mA
Rshunt = Vshunt_max / Iload = 10Ohms
VOUT = Gain * Vshunt = +-2V
3V3
R41
10k
U8
Logic +5V
Disable
IN+
Error Alarm
IN-
CT
OUT+
OUT-
FS20-12
GND
GND
PS_HV_EN
PS_HV_EN
PS_HV_EN_b:
0.0V / 3.3V (Digital)
From the microcontroller, used to disable the DCDC
PS_HV_VIN
PS_HV_VIN
12V:
0.8V-12.0V / 1.25A (Analog)
From the 12V power supply.
EMCO FS20-12:
Isolated, proportional DC to HV DC converter
IN: 0.7V-12V / 0.3A (No-Load)-1.25A (Full-Load)
OUT: 2kV / 5mA
INN
INP
Rsh1
10
HV_VCC
HV_VCC:
0V - 2kV / 5mA (Analog)
Output of the DC to HV DC converter
R42
100M
Low-Pass Filtering
R43
150k
C53
0.33uF
GND
PS_HV_VM
PS_HV_VM:
0.0V - 3.0V (Analog)
Measurement of the output voltage for the DC to HV DC converter
PS_HV_CM_N
Post-production review (2023.04.14)
****
Low-Pass Filtering MODIFICATION 1
2kV DCDC = HV monitor until 4.5kV
R43_20
RG1608P-7322-B-T5 (73.2kOhms // 0.1% // 0.1W // 0603)
Digi-Key Part Number: RG16P73.2KBCT-ND
C53_21 (for t = 1 ms)
08055C123KAT2A (0.012uF // 50V // X7R // 0805 // +/- 10%)
Digi-Key Part Number: 478-1384-1-ND
C53_22 (for t = 50 ms)
08053C684KAT2A (0.68uF // 25V // X7R // 0805 // +/-10%)
Digi-Key Part Number: 478-6328-1-ND
****
Low-Pass Filtering MODIFICATION 2
6kV DCDC = HV monitor until 10kV
R43_10
RG1608P-333-B-T5 (33kOhms // 0.1% // 0.1W // 0603)
Digi-Key Part Number: RG16P33.0KBCT-ND
C53_11 (for t = 1 ms)
08055C333K4T2A (0.033uF // 50V // X7R // 0805 // +/- 10%)
Digi-Key Part Number: 478-9893-1-ND
C53_12 (for t = 50 ms)
CGA4J3X7R1H155K125AB (1.5uF // 50V // X7R // 0805 // +/-10%)
Digi-Key Part Number: 445-174427-1-ND
Title ochvps_v1.0.PrjPcb
Title PS_HV.SchDoc
Size: A3
Number:*
Revision:*
Date: 21/03/2024
Time: 07:57:05
Sheet 8 of 10
MBE
EPFL STI IMT LMTS
Rue de la Maladière 71b
2000 Neuchâtel
Switzerland
EPFL

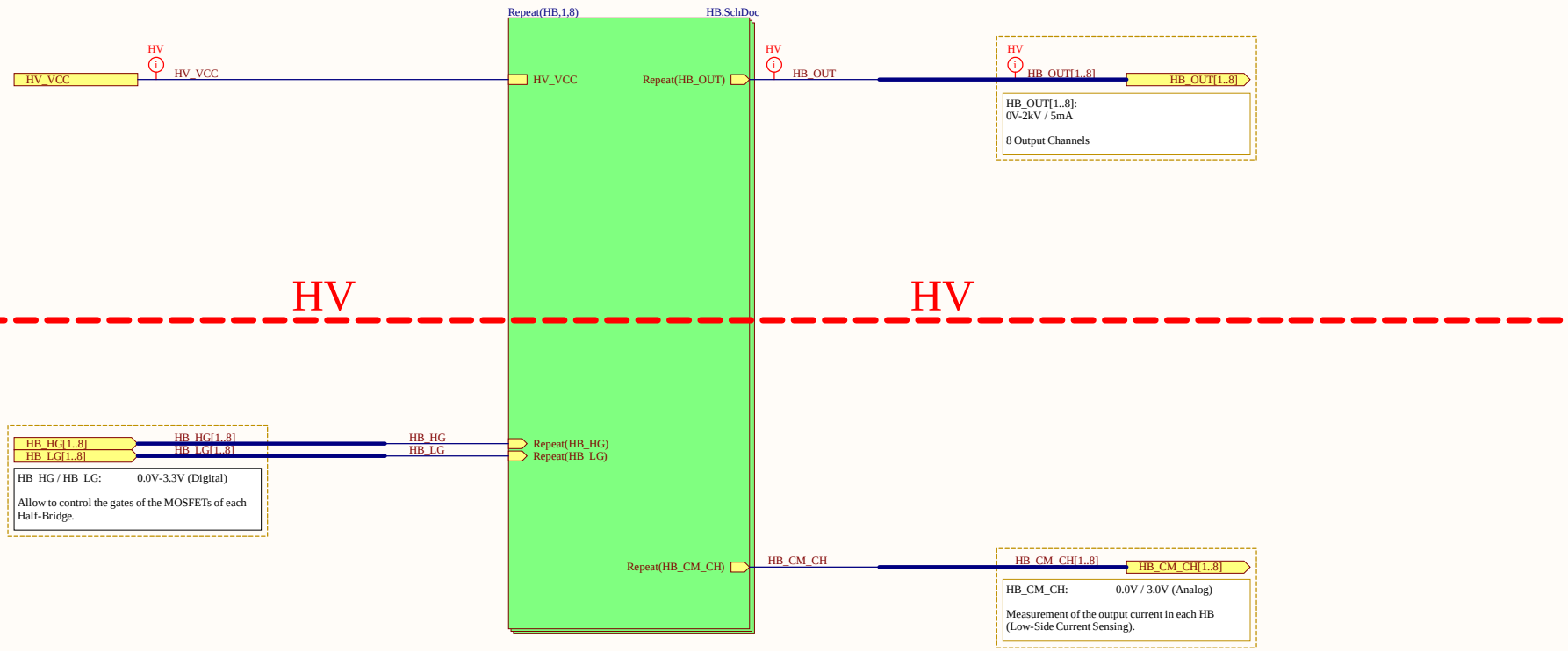

Title	***ochvps_v1.0.PrjPcb***		
Title	***HB_Assembly.SchDoc***		
Size: A3	Number:*	Revision:*	
Date: 21/03/2024	Time: 07:57:05	Sheet 9 of 10	

Mehdi Benbedda
EPFL STI IMT LMTS
Rue de la Maladière 71b
2000 Neuchâtel
Switzerland

EPFL

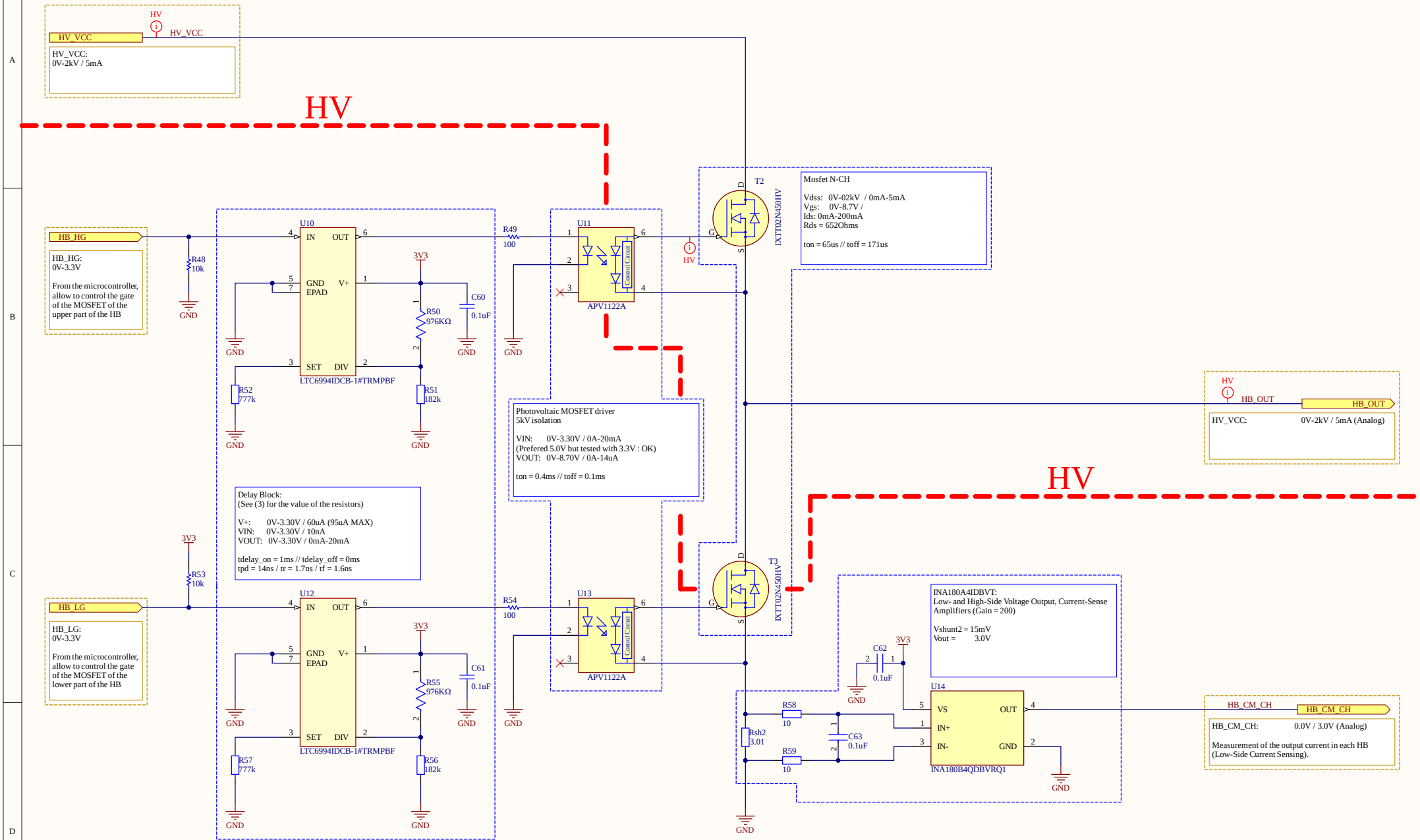

Title	*ochvps_v1.0.PrjPcb*	
Title	*HB.SchDoc*	
Size: A3	Number:*	Revision:*
Date: 21/03/2024	Time: 07:57:05	Sheet 10 of 10

Mehdi Benbedda
EPFL STI IMT LMTS
Rue de la Maladière 71b
2000 Neuchâtel
Switzerland

EPFL

Designator	Quantity	Supplier 1	Supplier Part Number 1	Name	Description
C1, C3	2	Farnell	9327885	C1206C105K3RACTU	Chip Capacitor, 1uF, +/- 10%, 25 V, -55 to 125 degC, 1206 (3216 Metric), RoHS, Tape and Reel
C2, C4, C28	3	Mouser	80-C0603C104K3R	C0603C104K3RACTU	CAP CER 0.1UF 25V X7R 0603
C5, C6, C7, C8, C9, C10, C11, C12, C13, C14, C16, C17, C18, C20, C21, C22, C30, H61, C60, H62, C61, H63, C62, H64, C63, H65, C64, H66, C65, H67, C66, H68, C41, H81, C42, H82, C43, H83, C81, H84, C82, H85, C83, H86, C84, H87, C85, H88	32	Mouser	581-0603BC104KAT4A	0603BC104KAT4A	CAP CER 0.1UF 25V X7R 0603
C15	1	Digi-Key	399-7413-1-ND	C0805C105K8RACTU	0805,C 10uF Ceramic Multilayer Capacitor; 10 V; +125degC, X7R Dielectric; +/-10%
C19	1	DigiKey	445-5964-1-ND	C1608X5R1E225K080AB	Multilayer Ceramic Capacitors 2.2µF ±10% 25V X5R 0603-0603
C23, C24	2	Digi-Key	478-1167-1-ND	0603BA220JAT2A	Cap Ceramic 22pF 50V C0G 5% SMD 0603 125C Paper T/R
C25	1	Digikey	P15460CT-ND	EEH-ZC1E560P	Cap Aluminum Polymer Hybrid 56uF 25VDC 20% (6.3 X 5.8mm) SMD 0.05 Ohm 900mA 4000h 125C Unprocessed T/R
C26	1	Farnell	3005828	16SVPG330MX	Capacitor, Polymer Aluminum, Radial, TheChim, 330 CAP, 16V, 5VPG, Surface Mount
C27, C30, C55, C58, C62, H61, C62, H62, C62, H63, C62, H64, C62, H65, C62, H66, C62, H67, C62, H68, C63, H61, C63, H62, C63, H63, C63, H64, C63, H65, C63, H66, C63, H67, C63, H68	20	DigiKey	445-1316-1-ND	C1608X7R1E104K080AA	TDK - C1608X7R1E104K080AA - Keramikkondensatorschichtkondensator, SMD, 0.1 µF, 25 V, 0603 [Metrinch 1608], ± 10%, X7R, C-Series
C29, C31	2	DigiKey	399-C0805C226M8PAC7210CT-ND	C0805C226M8PAC7210	Cap, 22uF, 10V, Mlcc, 0805,
C32, C48	2	DigiKey	478-6537-1-ND	F121A476M425P0000	CAP TANT POLY 47UF 25V 2917
C33, C34, C35	3	DigiKey	445-5720-1-ND	C1AAP1X7R1E106M250AC	Multilayer Ceramic Capacitors MLCC - SMD/SMT 1210 10uF 25wdc X7R 20% T=2.5mm
C36, C37, C42	3	Mouser	581-0603D105MA7JA	0603D105MA7JA	Cap Ceramic 1uF 25V X5R 20% SMD 0603 85C Paper T/R
C38, C49	2	DigiKey	445-7348-1-ND	C1005X7R1E104K050BB	TDK - C1005X7R1E104K050BB - SMD Multilayer Ceramic Capacitor, 0.1 µF, 25 V, 0402 [1005 Metric], ± 10%, X7R, C Series
C39	1	DigiKey	445-6893-1-ND	C1A2E3X7R2H223K250BB	TDK
C40, C41	2	DigiKey	490-6049-1-ND	GCM188L81H104KA57D	CAP CER 100000PF 50V X7R 0402
C43, C44, C45, C46	4	Mouser	810-CGA5L1X7R1E105K	CGA5L1X7R1E105K165AC	MURATA - GCM188L81H104KA57D - CAP, MLCC, AEC-Q200, X8L, 0.1UF, 0603
C47	1	DigiKey	399-1692F-1-ND	TS210J226M335A7D060	CAP CERAMIC, 10UF, 25V, X7R, 1206; Product Range:TDK - CGA Series; Capacitance:10µF; Capacitance Tolerance:±10%; Dielectric Characteristic:X7R; Voltage Rating:25V; Ceramic Capacitor Case:1206 (3216 Metric); Packaging:Cut Tape; MSL:-
C50	1	Digi-Key	445-5807-1-ND	CGA2B2X7R2H472K050BA	Cap Tant Polymer 22uF 35V D CASE 20% (7.3 X 4.3 X 2.8mm) SMD 7343-31, D 60 mOhm 125C T/R
C51	1	DigiKey	490-14348-1-ND	GCM155C1H101FA16D	CAP CER 470PF 50V X7R 0402
C52	1	DigiKey	445-9118-1-ND	C1608X5R1C475K080AC	0402 50V C0G 100pF 1% multilayer ceramic capacitor
C53	1	Mouser	581-0805C334KAT2A	0805C334KAT2A	Cap Ceramic 4.7uF 16V X5R 10% SMD 0603 85C Paper T/R
C54, C59	2	DigiKey	445-1287-1-ND	C1608C0G1H331J080AA	CAP CER 0.33UF 50V X7R 0805
C56, C57	2	Mouser	581-0603BA100J	0603BA100JAT2A	C-Series 0603 330 pF 50 V ±5 % Tolerance C0G SMT Multilayer Ceramic Capacitor
D1	1	DigiKey	2315TCT-ND	SFR50MBAHTG	AVX - 0603BA100JAT2A - SMD Multilayer Ceramic Capacitor, 10 pF, 50 V, 0603 [1608 Metric], ± 5%, C0G / NP0, AVX 0603BA1CC
D2, D3, D4, D5	4	Digikey	641-1165-1-ND	CD6HG/C5DL-G	FVS DIODE 5.5V 0.5V SC123-5
D6	1	Mouser	863-12MM3ZV3T1G	12MM3ZV3T1G	DIODE SZ1CT7K7 JEG 5W0V5 SOC123
D11	1	DigiKey	490-10245-1-ND	MLM1608J101KJ0D	Zener Diodes 35% SOD323-RSG-0.2W
H_GND	1	DigiKey	486-3854-ND	5040.1101	FERRITE BEAD 300OHM 0805 1LN
H_HV1, H_HV2, H_HV3, H_HV4, H_HV5, H_HV6, H_HV7, H_HV8	8	DigiKey	486-3855-ND	5040.1102	Test Jack; 2mm; 10A; PCB Mt; Single Crest; 90-Degree; Thermoplastic; Black; UL94V-2; PB 1101 Test Jack; 2mm; 10A; PCB Mt; Single Crest; 90-Degree; Thermoplastic; Red; UL94V-2; PB 1101
I1	1	DigiKey	CP-063AH-ND	PJ-063AH	CONN PWR JACK 2X5.5MM SOLDER
I2	1	Newark	67T2280	10118194-0001LF	Micro USB B Type Receptacle, 1.8 A, -55 to 85 degC, 5-Pin SMD, RoHS, Tape and Reel
J9, J4	2			EZ5/N/3/A	
L1	1	Mouser	652-SRP1245A-4R7M	SRP1245A-4R7M	BOURNS SRP1245A-4R7M Surface Mount Power Inductor, SRP1245A Series, 4.7 H, 12 A, 27 A, Shielded, 0.025 ohm
LED1, LED3	2	DigiKey	732-4983-1-ND	150060GS75000	SMD LED,green 3.5 V 0805, 150060GS75000, Würth Elektronik
LED2	1	DigiKey	350-2044-1-ND	598-8170-107F	Single Color, 2 V, -30 to 85degC, 2-Pin SMD 0805, RoHS, Tape and Reel
P1	1	Digi-Key		FTSH-105-01-F-DV-K	Conn Unshrouded Header HDR 10 POS 1.27mm Solder ST SMD T/R
Q1	1	Digikey	SIA433BRLFCT-ND	SIA433BRLF	Small Low ON Resistance MOSFET P-Channel 20V 6A 3-Pin SOT-23E T/R
Q2, Q3	2	Digikey	296-49691-1-ND	CSD17570Q5A	MOSFET 30V N-Chan NexFET Pwr MOSFET 8-VSONP
R1	1	DigiKey	311-47KGRCT-ND	RC0603JR-0747KL	Thick Film Resistor
R2, R3	2	Farnell	4013304	RC0603FR-133ERL	RC Series 0603 10 Ohm ±1 % 0.1 W ±100 ppm/°C Surface Mount Thick Film Resistor
R4	1			RES_0	Thick Film Resistor
R5, R6, R7, R46, R48, R49, R47	5	DigiKey	311-0.0GRCT-ND	RC0603JR-070RL	RES SMD 0 OHM JUMPER 1/10W 0603
R8	1	DigiKey	541-3893-1-ND	CRCW06034K70JNEA	RES Thick Film, 4.7kΩ, 5%, 0.1W, 100ppm/°C, 0603
R9, R10, R11, R12, R13, R15, R16, R31, R41, R43, R45, H61, R45, H62, R45, H63, R45, H64, R45, H65, R45, H66, R45, H67, R45, H68, R53, H61, R53, H62, R53, H63, R53, H64, R53, H65, R53, H66, R53, H67, R53, H68	3	Digi-Key	311-10.0KRCT-ND	RC0603FR-0710KL	Res General Purpose Thick Film 0603 10K Ohm 1% 1/10W ±100ppm/°C Metalized SMD Paper T/R
R11	1	Mouser	71-CRCW0603-1-0M-E3	CRCW06031M00JNEA	VISHAY - CRCW06031M00JNEA - SMD Chip Resistor, 0603 [1608 Metric], 1 Mohm, CRCW e3Series, 75 V, Thick Film, 100 mW
R14, R17	2	DigiKey	541-4022-1-ND	CRCW06032K20FKEA	SMD Resistor, Thick film 2.2 kOhm, ± 1%, 0603, CRCW06032K20FKEA, Vishay
R18, R19	2	Mouser	71-CRCW06031K00FKEAC	CRCW06031K00FKEAC	Chip Resistor, 1kΩ Ohm, +/- 1%, 100 mW, - 55 to 155 degC, 0603 (1608 Metric), RoHS, Tape and Reel
R20, R40	2	DigiKey	541-CRCW0805K70JNEBCT-ND	CRCW0805K70JNEB	VISHAY CRCW0805K70JNEB RES, THICK FILM, 4K7, 5%, 0.125W, 0805
R21	1	DigiKey	541-CRCW0805K32FKEACCT-ND	CRCW0805K32FKEAC	Res Thick Film 0805 3.32K Ohm 1% 1/8W ±100ppm/°C Metalized SMD Paper T/R
R22	1	DigiKey	P1.0TKCT-ND	ERJ-3EKF1001V	Res Thick Film 0603 1.0K Ohm 1% 0.1W(1/10W) ±100ppm/°C Pad SMD Automotive T/R
R23	1	DigiKey	541-CRCW0805680RJNEBCT-ND	CRCW0805680RJNEB	Thick Film Resistors - SMD 1/8watt 680ohms 5%
R24	1				Thick Film Resistor
R25	1	Digikey	P37.4BCCT-ND	ERA-2AEB374X	RES SMD 37.4KOHM1 1% 1/16W 0402
R26, R30	2	Mouser	603-RT0402BRD0710KL	RT0402BRD0710KL	RES SMD 10K OHMS 1% 1/16W 0402
R27, R28	2	Digi-Key	311-1.0HRCT-ND	RC0603FR-071RL	Res General Purpose Thick Film 0603 1 Ohm 1% 1/10W ±200ppm/°C Metalized SMD Paper T/R
R29	1	DigiKey	P30.1KDCCT-ND	ERA-2AEB301X	PANASONIC - ERA2AEB301X - RES, 30K1, 0.1%, THIN FILM
R32	1	Digikey	541-49.9KJCT-ND	CRCW04024K99JNEDP	RES SMD 49.9KOHM5 5% 1/16W 0402
R33	1	DigiKey	RMC5S6R0JTD0RCT-ND	RMC5S6R0JTD0RC	RES 6.0OHM JUMPER 1/16W 0402
R34	1	DigiKey	P0.01BVCT-ND	ERJ-8CWFR010V	RES 0.01 OHM 1% 3W 1206
R35, R36, R38, H81, R38, H82, R38, H83, R38, H84, R38, H85, R38, H86, R38, H87, R38, H88, R59, H81, R59, H82, R59, H83, R59, H84, R59, H85, R59, H86, R59, H87, R59, H88, Rdn1	16	DigiKey	RNCP0603FKT180KCT-ND	RNCP0603FKT180K	RES 180 OHM 0.05% 1/10W 0603
R37	1	DigiKey	541-CRCW04021500KFKTDCT-ND	CRCW04021500KFKTD	RES SMD 150K OHM 1% 1/16W 0402
R39	1	DigiKey	YAG2380CT-ND	RC0402FR-0793K3L	Res Thick Film 0402 93.1K Ohm 1% 0.063W(1/16W) ±100ppm/°C Metalized SMD Paper T/R
R39	1	Mouser	71-CRCW0402-10K	CRCW04021K00FKTD	Res Thick Film 0402 10K Ohm 1% 0.063W(1/16W) 100ppm/°? SMD Automotive Paper T/R
R40	1	DigiKey	3M102031006RFE-ND	3M102031006RFE	Thick Film Resistors - Through-Hole 100M ohms 1%
R43	1	Mouser	660-RN73H1JTD1503B25	RN73H1JTTD1503B25	Res 150K Ohm 0.1% 1/10W 0603
R46, H81, R46, H82, R46, H83, R46, H84, R46, H85, R46, H86, R46, H87, R46, H88, R54, H81, R54, H82, R54, H83, R54, H84, R54, H85, R54, H86, R54, H87, R54, H88	16	Mouser	667-ERJ-14YJ101U	ERJ-14YJ101U	RESTOR, THICK FILM, 1210, 100 OHM, 5%, 500mW; Product Range:PANASONIC - ERJ Series; Resistance:100ohm; Power Rating:500mW; Resistance Tolerance:± 5%; Resistor Case Style:1210 (*3225 Metric); Resistor Element Type:Thick Film; MSL:-
R50, H81, R50, H82, R50, H83, R50, H84, R50, H85, R50, H86, R50, H87, R50, H88, R55, H81, R55, H82, R55, H83, R55, H84, R55, H85, R55, H86, R55, H87, R55, H88	16	DigiKey	A14830KT-ND	RQ73C2B9760KBTD	RQ73B 1206 9760±0.1 4W 30ppm/°C 0.1% 200V
R51, H81, R51, H82, R51, H83, R51, H84, R51, H85, R51, H86, R51, H87, R51, H88, R56, H81, R56, H82, R56, H83, R56, H84, R56, H85, R56, H86, R56, H87, R56, H88	16	DigiKey	A13958KT-ND	RQ73C2B182KBTD	Thick Film Resistor
R52, H81, R52, H82, R52, H83, R52, H84, R52, H85, R52, H86, R52, H87, R52, H88, R57, H81, R57, H82, R57, H83, R57, H84, R57, H85, R57, H86, R57, H87, R57, H88	16	DigiKey	764-1313-1-ND	PTN1206E7773BET1	RES SMD 777K OHM0.1% 0.4W 1206
Rdn2_H81, Rdn2_H82, Rdn2_H83, Rdn2_H84, Rdn2_H85, Rdn2_H86, Rdn2_H87, Rdn2_H88	8	DigiKey	1712-CFR0805R301E1CT-ND	CFR0805R301E1	Res Thin Film 3.01Ohm 0.1% 100mW 25ppm/°C 2-Pin 0805 SMD T/R
SW1	1	DigiKey	401-2016-1-ND	PCM12SMTR	C & K COMPONENTS - PCM12SMTR - SWITCH, SPDT, 0.3A, 6VDC, SMD
SW2	1	DigiKey	CKN1779CT-ND	SS01MSABE	Slide Switch, SS Series, SPDT, Horizontal, SMD, 100 mA, 30 V, RoHS Compliant, Tea
T1	1	DigiKey	1297-1106-1-ND	750313626	WURTH ELEKTRONIK - 750313626 - TRANSFORMER, AEC-Q200, 1:2, 340UH, SMT
T2, H83, T2, H82, T2, H83, T2, H84, T2, H85, T2, H86, T2, H87, T2, H88, T3, H81, T3, H82, T3, H83, T3, H84, T3, H85, T3, H86, T3, H87, T3, H88	16	Mouser	747-977029#500HV	977029#500HV	Mouser N-CH 450V 0.2A TO220
U1	1	Mouser	634-CP2102-GM	CP2102-GM	Single-Chip USB to UART Bridge, 1024 Bytes EEPROM, -40 to 85 degC, 28-pin QFN, Tube
U2	1	Digi-Key	MK60DN256VLQ10-ND	MK60DN256VLQ10	ARM Microcontrollers - MCU KINETIS 256K
U3	1	DigiKey	24AA32T-I/OTCT-ND	24AA32T-I/OT	EEPROM, 256X8, Serial, CMOS, PDSO5
U4	1	Digi-Key	1AG23S05T1NOPB-ND	1AG23S05T1NOPB	DC DC CONVERTER 5.0-36 VIN
U5	1	DigiKey	MAX3535A+-ND	MAX3535A+	Transformer Dvr for Isc, RS-485/RS-232 Xface, Single Supply 5.0V±3.3V, SOICB
U6	1	Mouser	595-TPS76550D	TPS76550D	IC REG LINEAR 5V 150MA 8SOIC
U7	1	Mouser	595-TPS5528RPMR	TPS5528RPMR	Switching Regulator, Average-Current, 6.35A, 2400kHz Switching Freq-Max, PREC20
U8	1	DigiKey	945-3282-ND	F025-12	DC-DC Converter; Through Hole; DIP; 10W; 2000VDC; Vin: 5.7-12V; Vo: F5 Series
U9	1	Mouser	595-AMC1302QDWVRQ1	AMC1302QDWVRQ1	Automotive ±50mV-Input High-Precision Reinforced Isolated Amplifier for Current Sensing 8-SOIC -40 to 125
U10, H83, U10, H82, U10, H83, U10, H84, U10, H85, U10, H86, U10, H87, U10, H88, U12, H81, U12, H82, U12, H83, U12, H84, U12, H85, U12, H86, U12, H87, U12, H88	16	DigiKey	1703SMFDCT-ND	LTC6904CDB-1#TRMPBF	IC DELAY LINE 6-DFN
U11, H81, U11, H82, U11, H83, U11, H84, U11, H85, U11, H86, U11, H87, U11, H88, U13, H81, U13, H82, U13, H83, U13, H84, U13, H85, U13, H86, U13, H87, U13, H88	16	Mouser	768-APV1122A	APV1122A	Photovoltaic MOSFET driver, 5kV isolation, 8-DIP SMD, 8.7V/7mA output
U14, H81, U14, H82, U14, H83, U14, H84, U14, H85, U14, H86, U14, H87, U14, H88	8	DigiKey	296-RA3808AQDBVRQ1CT-ND	RA3808AQDBVRQ1	Low and High-Side Voltage Output Current-Sense Amplifier 1 Channel 200V/V 5-Pin SOT-23 T/R
Y1	1	Mouser	448-LFXTAU055663REEL	LFXTAU055663REEL	Crystal RMs ±25ppm (Tol) ±30ppm (Stability) 18pF FUND 150Ohm 4-Pin CSMD T/R