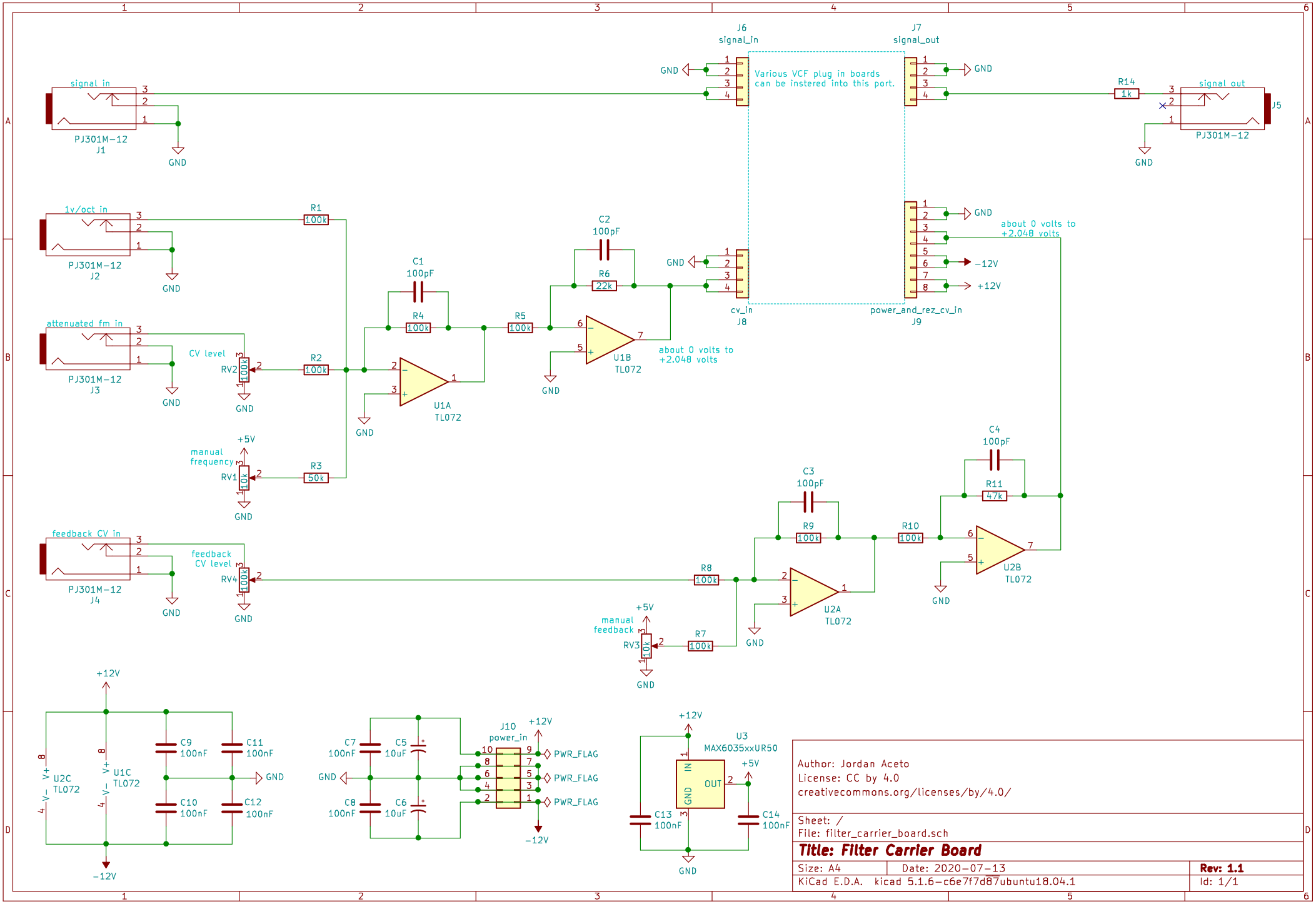
signal in
PJ301M-12
J1
GND
J6
signal_in
Various VCF plug in boards can be instered into this port.
J7
signal_out
R14
1k
signal out
J5
1v/oct in
PJ301M-12
J2
R1
100k
C1
100pF
R4
100k
R5
100k
C2
100pF
R6
22k
U1B
TL072
about 0 volts to +2.048 volts
cv_in
J8
power_and_rez_cv_in
J9
-12V
+12V
attenuated fm in
PJ301M-12
J3
CV level
RV2
100k
R2
100k
U1A
TL072
manual frequency
RV1
10k
R3
50k
+5V
C4
100pF
R11
47k
C3
100pF
R9
100k
R10
100k
U2B
TL072
feedback CV in
PJ301M-12
J4
feedback CV level
RV4
100k
R8
100k
U2A
TL072
manual feedback
RV3
10k
R7
100k
U2C
TL072
U1C
TL072
C9
100nF
C11
100nF
C10
100nF
C12
100nF
C7
100nF
C5
10uF
C8
100nF
C6
10uF
J10
power_in
PWR_FLAG
U3
MAX6035xxUR50
IN
OUT
GND
C13
100nF
C14
100nF
Author: Jordan Aceto
License: CC by 4.0
creativecommons.org/licenses/by/4.0/
Sheet: /
File: filter_carrier_board.sch
Title: Filter Carrier Board
Size: A4
Date: 2020-07-13
Rev: 1.1
KiCad E.D.A. kicad 5.1.6-c6e7f7d87ubuntu18.04.1
Id: 1/1