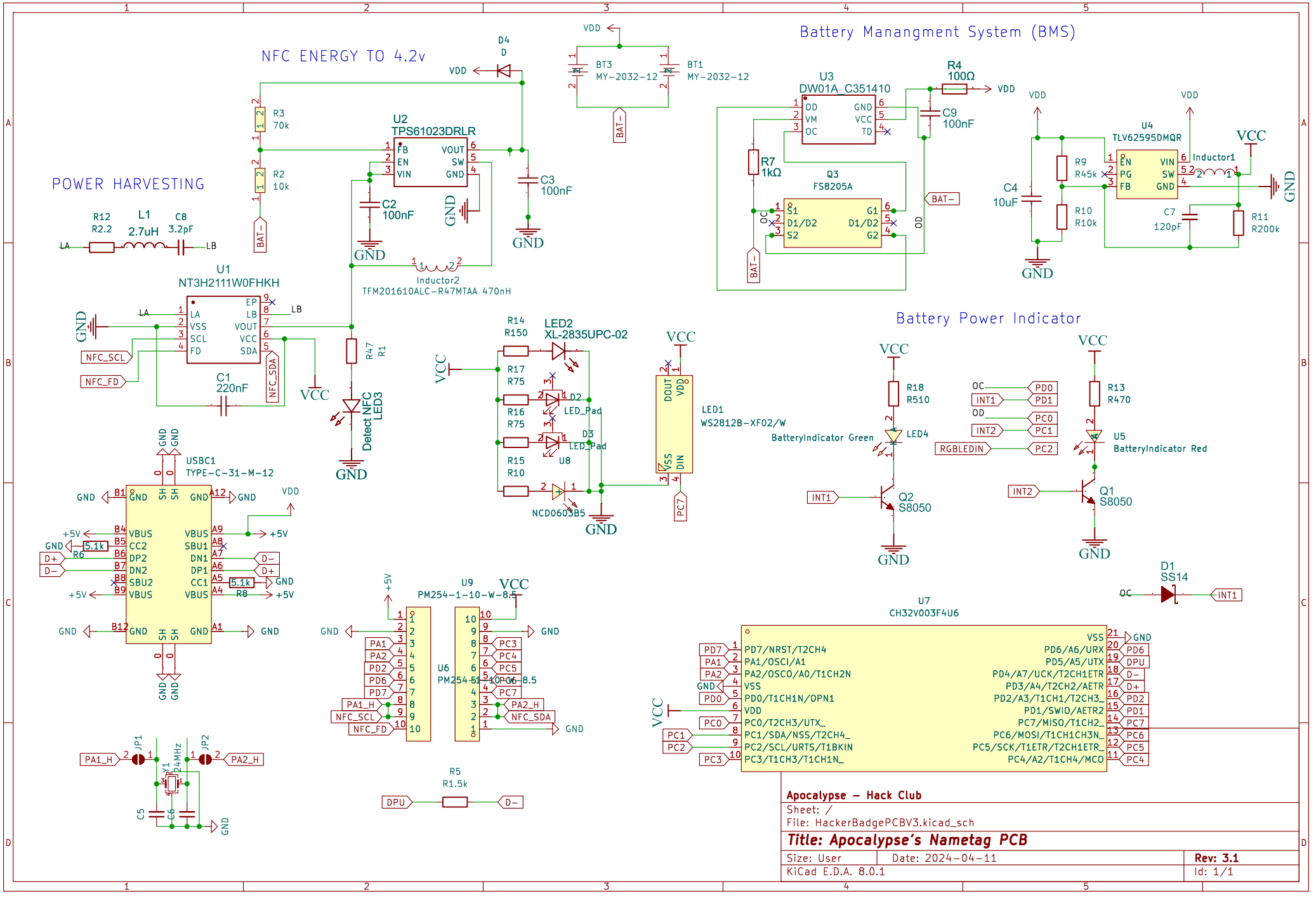
NFC ENERGY TO 4.2v
Battery Manangment System (BMS)
POWER HARVESTING
Battery Power Indicator
U2
TPS61023DRLR
U3
DW01A_C351410
Q3
FS8205A
U4
TLV62595DMQR
U1
NT3H2111W0FHKH
Inductor2
TFM201610ALC-R47MTAA 470nH
Inductor1
LED2
XL-2835UPC-02
LED1
WS2812B-XF02/W
BatteryIndicator Green
BatteryIndicator Red
Q2
S8050
Q1
S8050
USBC1
TYPE-C-31-M-12
U9
PM254-1-10-W-8.5
U6
PM254-1-10-W-8.5
U7
CH32V003F4U6
D1
SS14
Detect NFC LED3
BT3
MY-2032-12
BT1
MY-2032-12
VDD
VCC
GND
BAT-
Apocalypse - Hack Club
Sheet: /
File: HackerBadgePCBV3.kicad_sch
Title: Apocalypse's Nametag PCB
Size: User
Date: 2024-04-11
Rev: 3.1
KiCad E.D.A. 8.0.1
Id: 1/1